SIMATIC motion

Energy efficient · Beautiful environment





# KD700

## Book type high-performance vector inverter



The KD700 inverter is a brand-new masterpiece launched by us based on over ten years of professional research and development experience. Its regular configuration includes a dual-display LED panel with the function of duplicating parameters, as well as an LCD liquid crystal panel that supports duplicating parameters in multiple languages. This innovative design enables rapid switching of parameters between different dedicated software, and can be widely adapted to various application scenarios such as photovoltaic water pumps, synchronous motors, asynchronous motors, elevators, and cranes. This core advantage not only greatly optimizes the operational experience of customers, but also significantly reduces their inventory pressure, eliminating the need to reserve multiple devices for different functional requirements.

In terms of hardware configuration, the KD700 is meticulously designed with 7 multi-functional terminals, 2 sets of AI input, 2 sets of relay output and AO output, and integrates STO safety function into it. Even without the additional configuration of IO expansion cards, these rich interfaces and functions can already meet 99% of the regular working condition requirements, ensuring the high applicability and convenience of the equipment.

Structurally, the KD700 modularizes the control board and power board, greatly facilitating customer maintenance and the free replacement of different accessories

In terms of communication and expansion capabilities, the KD700 demonstrates outstanding compatibility, fully supporting various mainstream communication cards on the market, such as PROFIBUS, PROFINET, CANOPEN, ETHERCAT, MODBUS TCP, etc., and is also compatible with multiple types of PG cards. It provides a high degree of flexibility for the integration of industrial automation systems.

In conclusion, the KD700 frequency converter, with its affordable price, delivers a high-end and comprehensive functional experience to users. It is undoubtedly a highly efficient, intelligent, and economical drive control solution, truly an ideal machine for customers.

### POWER RATINGS

1×220 - 240V : 0.4 - 7.5kW　　3×220 - 240V : 0.4 - 220kW　　3×380 - 480V : 0.75 - 1000kW

### COMPATIBILITY

One Vfd For All software Applicable to ***Asynchronous Motor, Synchronous Motor, Single Motor, Elevator Motor*** and ***Solar Pump.***

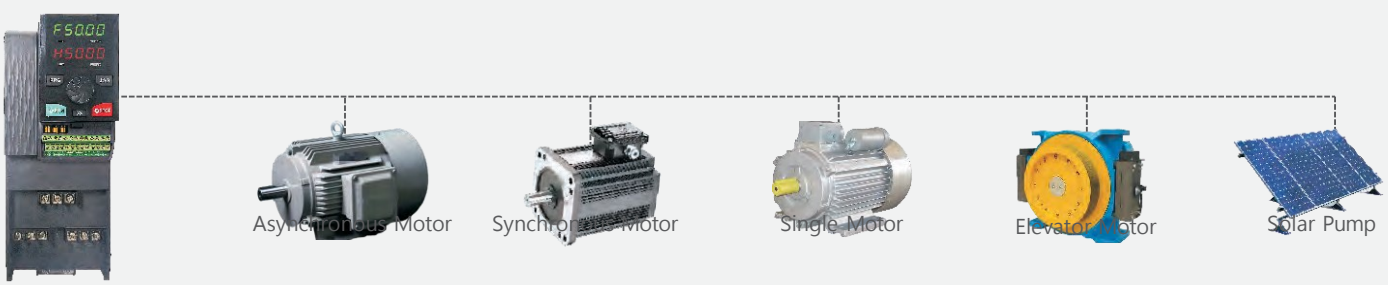

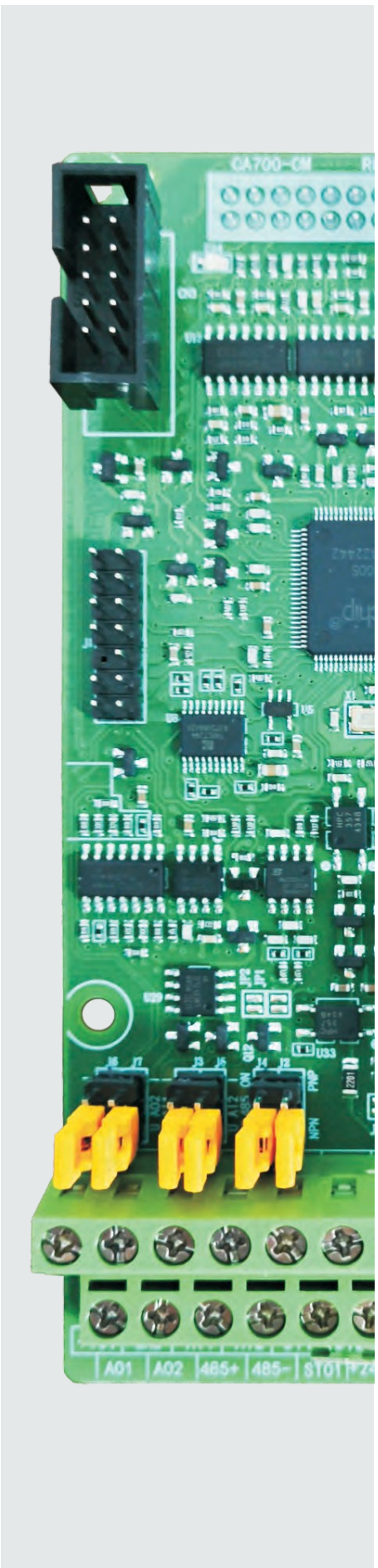


## STRUCTURAL HARDWARE FEATURES

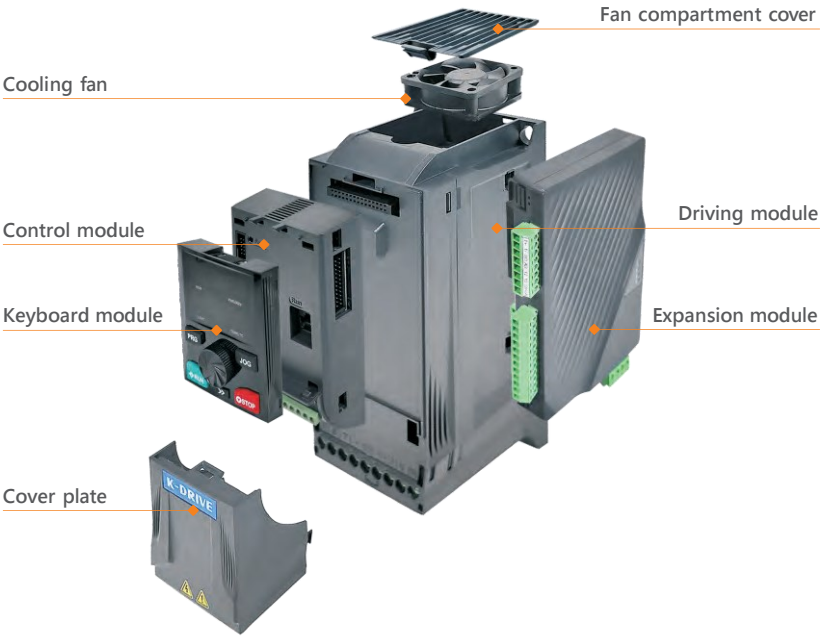


## MODULARIZATION

Modular expansion house, supporting multiple forms of expansion simultaneously.

| Increase business, flexibility, and control inventory | |
|---|---|
| free combination | 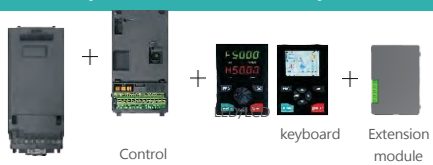 Drive + Control + keyboard + Extension module |
| The same control applies to all power drives |  Control → Drive Drive |
| The same keyboard is suitable for controlling all models |  LED/LCD keyboard → Control |
| Drive+ControlCan work independently |  Drive + Control → Motor |
| Free customization |  LED keyboard, LCD keyboard, Extension module |

## Reliable overcurrent ground protection

Output: Adopting three-phase current sampling and comprehensive overcurrent to ground short circuit protection;

Input: Equipped with buffer resistor charging circuit abnormal protection, the entire series is equipped with input phase loss hardware protection.

≤37G comes standard with a built-in brake unit, while 45G~160G can be optionally equipped with a built-in brake unit

>37G~110G can be optionally equipped with DC reactors, ≥132G comes standard with built-in DC reactance.







### SUPPORTS LED AND LCD DISPLAY KEYPAD.

Both keypads support user-defined parameter copying between multiple machines by default. Parameter files can be copied to the PC and sent remotely to other debugging sites, which is convenient for remote management and remote debugging.(Can choose different language directly in the LCD keypad, such as Chinese, English, Polish, And Spain etc)




LED keyboard




LCD keyboard




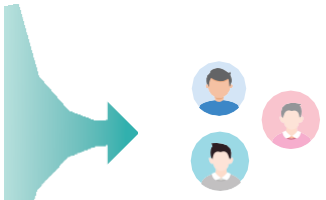

The keyboard supports 300 meter remote Ethernet connection.

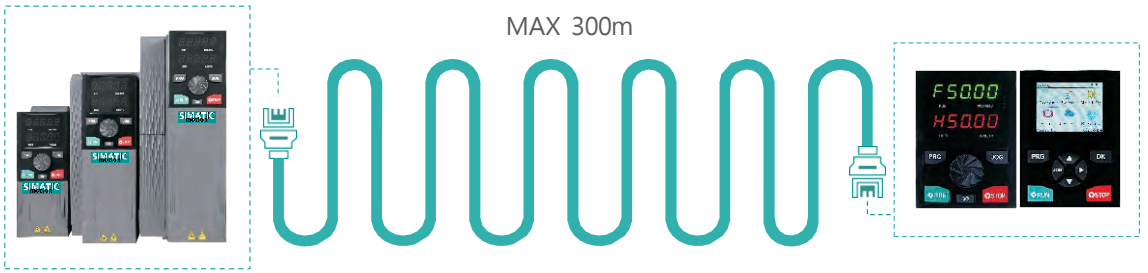

# PERFORMANCE CHARACTERISTICS

### Multi speed operation

Supporting 16 speed operation, it can achieve simple PLC cycle operation to meet flexible customer process requirements;

### PID control, sleep wake function

There are various sources of input and feedback, with output compensation and sleep wake-up function, which is convenient for applications such as constant pressure water supply;

### Switching between two sets of motor parameters

Support parameter switching between two sets of motors, which can be modified or switched using DI terminals to adapt to both sets of motors.

### Excellent and complete brake logic

Cooperating with the application of brake type motors in construction elevators, mine hoists, civilian elevators, etc., can ach-ieve safe, stable, and comfortable control of the operation process;

### Fire control mode

Can meet the relevant control requirements of users in fire protection mode;

### STO safety torque shutdown control protection

Through the coordination of software and hardware, the safe shutdown of output torque is achieved, providing timely protection.

### Tension control

Functions such as roll diameter calculation, thickness accumulation calculation, linear velocity calcula-tion, tension compensation, tension taper, automatic detection of material breaka-ge, and automatic roll change.

### Stable and reliable

Independent air duct; Three proof UV coating; Preferred components and large margin selection.

Water pump | Woodworking machinery | Printing and packaging | Ceramic machinery | Industrial and mining

Fan | Textile printing and dyeing | Metalworking | Injection molding | CNC

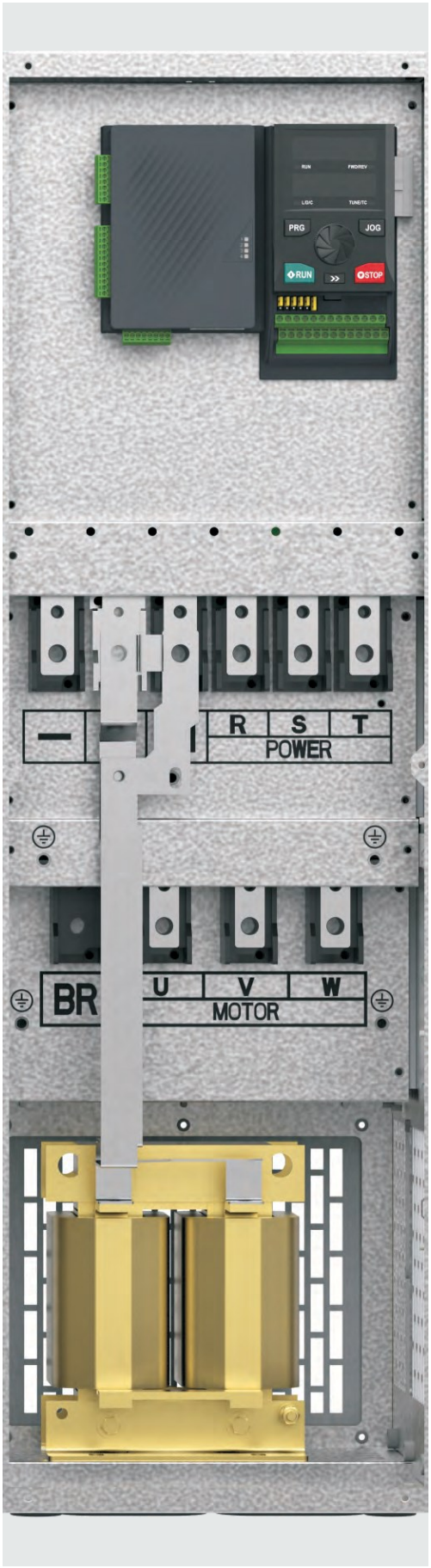

# More Beyond inheritance

## 01 Rich Terminal Functions

Normal Controls borad=other Brand VFD+IO Card, In order to improve our VFD convenience,all series vfd build in 7×DI (one for HDI) Input, 2×AI Input, 2×AO Output, 2×Relays Output and NPN&PNP, and Sto terminal,which can almost match more than 95% requirement in the market.

NOTE: Only 0.4kW-400kW are listed here.

Latest dedicated chip

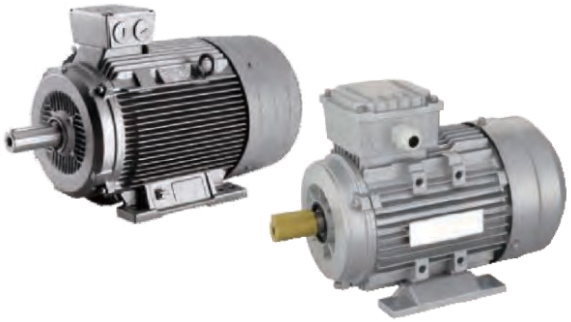

## 02 One Parameter to choose different Software

KD700 used with very big capacity IGBT, which can use one parameter to change different software as customer need including ASYNCHRONOURS and SYNCHRONOUS, off grid solar pump, and elevactor etc.

## 03 Hot pluggable and detachable control pannel

Quite conveninet for users to implement remote control via a cable connection, and the settings are easily transferred via the control pannel to another drive or from a PC to a drive with SIMATIC MOTION Drive Monitoring Software

## 04 Abundant hot-plugged options

One platform millions of version is the basic design concept of KD700. Numerous options are available and can be mounted and tested at factory or be hot-plugged in later for change-over or upgrade.



0.4~22KW

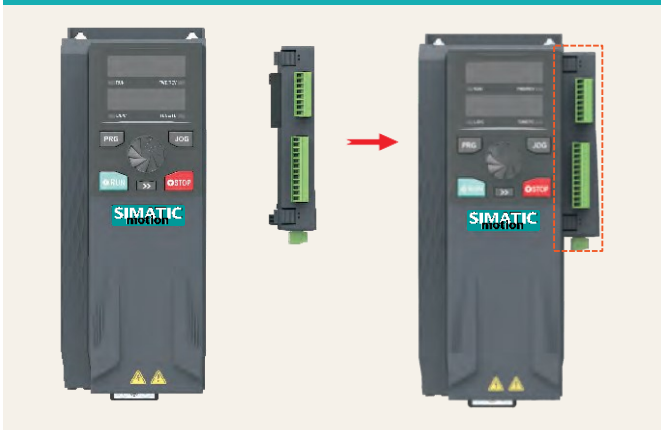

30~1000KW

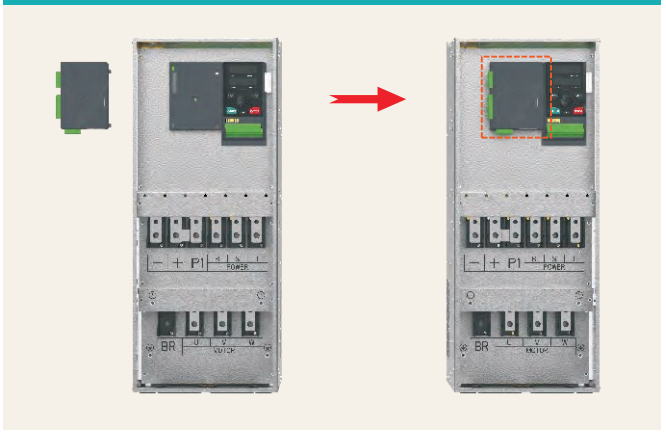

Outer Cards Install way: One model support 3 cards combination freely.
Such as : 2 IO+ 1PG Or 1PG+ 2 communication cards.

Modbus TCP

PROFIBUS®

PROFINET®

EtherCAT®

CANopen

EtherNet/IP™

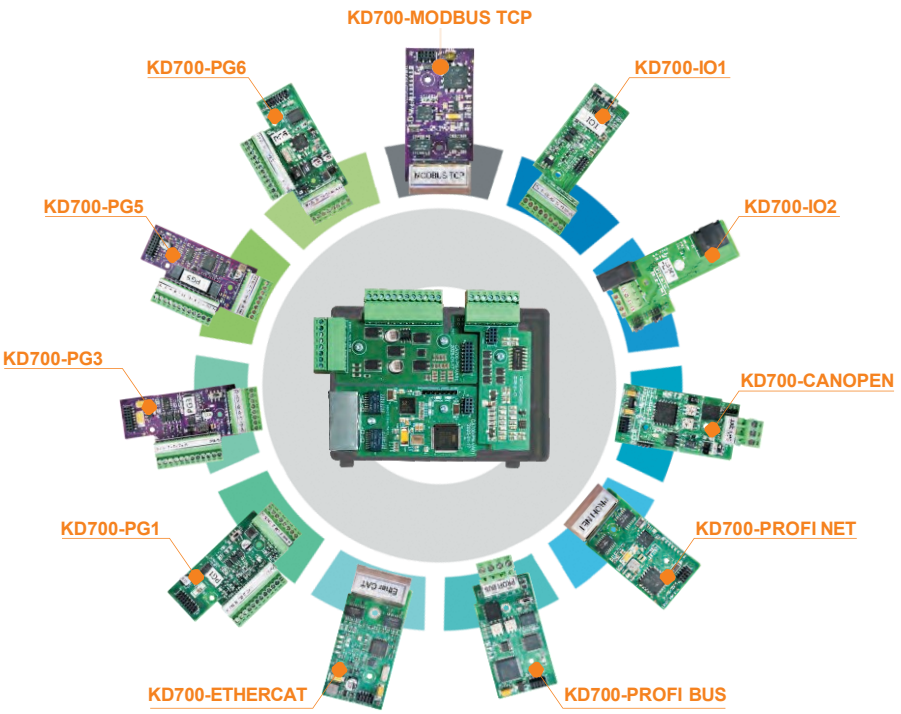


## 05 Four control modes

KD700 drives are equipped with four kinds of control modes, V/Hz, SVC1, SVC2, VC, fulfilling a wide variety of demanding industrial applications.

| Control mode | V/Hz | SVC1 | SVC2 | VC |
|---|---|---|---|---|
| Speed adjustable range | 1:100 | 1:100 | 1:200 | 1:1000 |
| Speed accuracy | ±0.5% | ±0.2% | ±0.2% | ±0.02% |
| Speed ripple | / | ±0.3% | ±0.3% | ±0.1% |

## 06 Supreme start torque

The drives of KD700 series can output 200% of the rated output torque at 0Hz under VC control mode.

200%

## 07 Torque control programmable

Speed control and torque control are programmable via parameter or can be switched via terminal digital input at KD700. Torque control accuracy reaches ±5%, while response time is less than 5ms.




## 08 Four kinds of position control

Under VC control mode, a KD700 drive can undertake the task of zero-speed clamping, angular positioning*1, fixed-length control*2, and positioning via pulse input. The precision of positioning at pulse input reaches ±1 pulse.

NOTE: *1:4angular positions realizable', *2: 8 fixed-length positions programmable.




## 09 Flexible electronic gear

Through the function of electronic gear at KD700, closed-loop vector control still can be performed even the encoder is not mounted at the motor shaft, quite convenient for applications when the encoder is not easily to be mounted at the motor shaft.

NOTE: *3: The shaft that the encoder is mounted at should have fixed speed ratio with motor shaft.



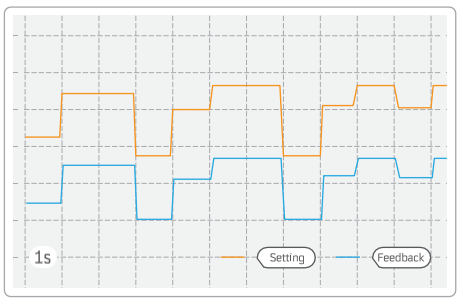


## 10 Quick dynamic response

Torque response time of KD700 drives is as short as 10ms at SVC1 or SVC2 mode.

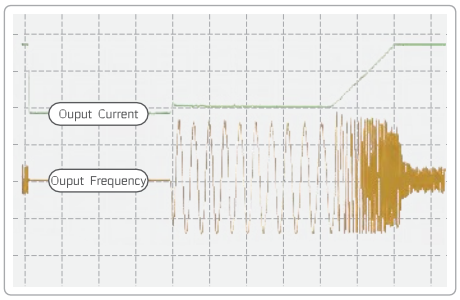


## 11 Cycle-By-Cycle current limit

The KD700 drives are equipped with the function of cycle-by-cycle current limit. The drive knows how to adjust its output frequency and current suitably to avoid trip when there is a saltation at the load.

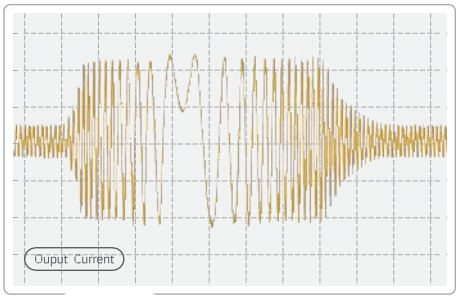


## 12 Short dead time between forward and reverse

Even at the setting of deceleration and acceleration time 0.1 sec-ond, a KD700 drive can smoothly complete the transition between forward and reverse, popular at applications requiring frequent and fast switchover between forward and reverse.

## 13 Preeminent field-weakening control

Equipped with field-weakening control, KD700 drives have the preeminent output torque and ramp character.

## 14 V/Hz separated control

Output voltage and output frequency can be controlled separately for the KD700 drives, widely used at variable frequency power sources, torque motors, etc.

# Multifunctional and Versatile

## 15 Modular, flexible and adaptable

KD700 on the basis of modular design concept aims to provide users multifunctional control for a wide variety of general purpose applications. Function alities, and output capability of KD700 have been proved to meet the requirements of a vast majority of industrial control. SIMATIC MOTION is providing KD700 single-phase 220V, three-phase 220V to 690V input, and power ratings 0.4kW up to 1MW, which means that system designers, OEMs and end users are free to connect the drive to their chosen motor and have confidence that the system will operate to the highest possible standards.

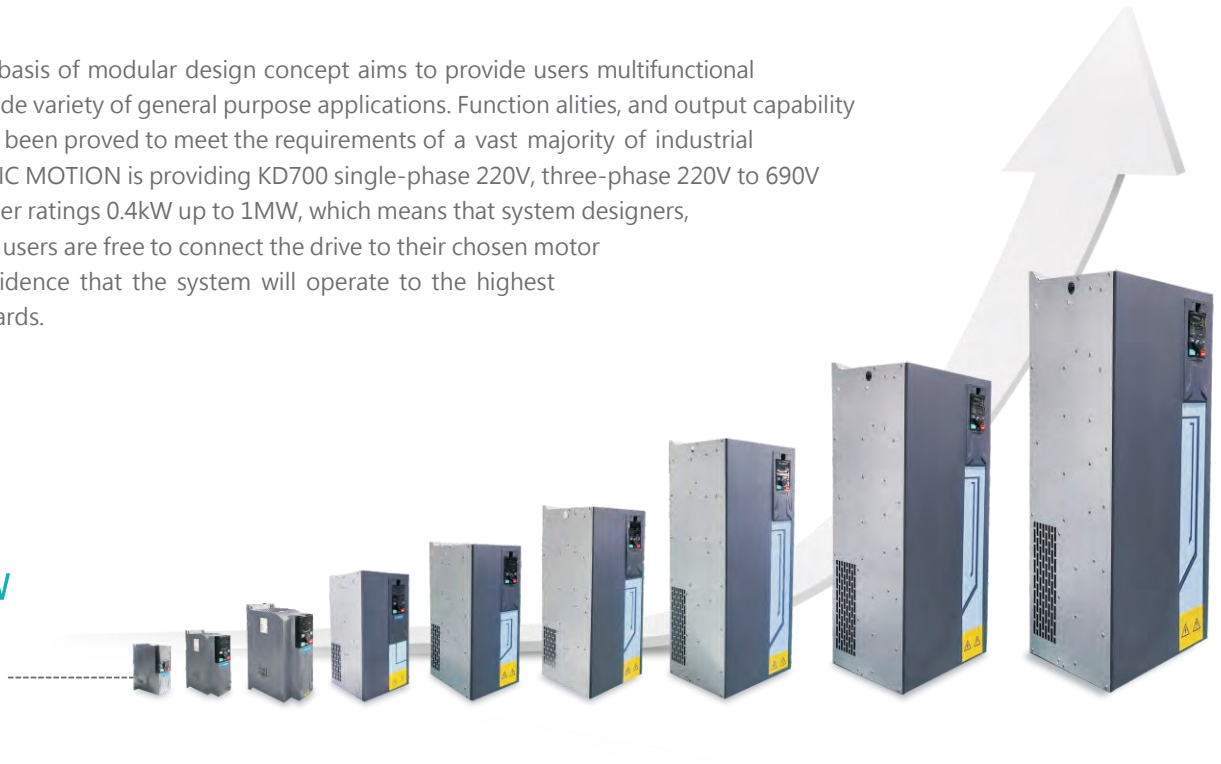

## FULL-CYCLE TESTING



During product development, the whole PCB board will be systematically tested. After assembly, the whole machine will be tested and the EMC environment will be tested. After passing the quality inspection, a 12-hour, 50°C high-temperature aging test will be performed to ensure the delivery quality of the entire series of products.

## TENSION CONTROL METHOD

Speed control: Tension position feedback automatically adjusts the PID output speed slip to ensure constant material tension;

Open-loop tension torque control: the inverter directly controls the motor output torque and output frequency to follow the material line speed automatically without tension feedback signal;

Closed-loop tension torque control: tension feedback signal needed and is adjusted by built-in PID to form a closed-loop tension control motor output torque, so that the material surface tension is constant.

### BASIC PRINCIPLES

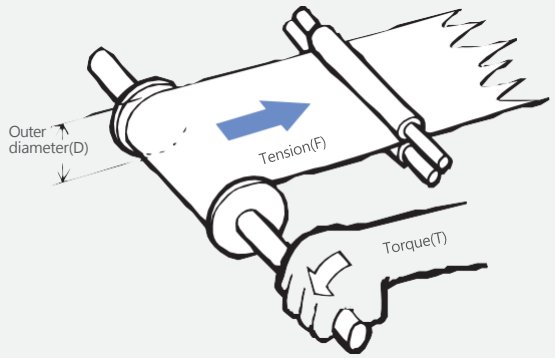


Since：Torque(T)=Tension(F)×Radius(D/2)

$$\text{Therefore：tension (F)} = \frac{\text{Torque(T)}}{\text{Radius(D/2)}} = \frac{2\times T}{D}$$

**Linear Speed Method**

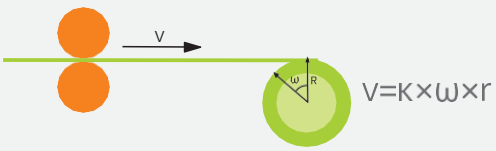


### COMMON SOLUTIONS

**Wire speed method:**

The front-end machinery provides the material traction, which determines the material line speed, and the material tension is determined by the KD700 winding. The roll diameter can be calculated from the wire speed given by the traction.

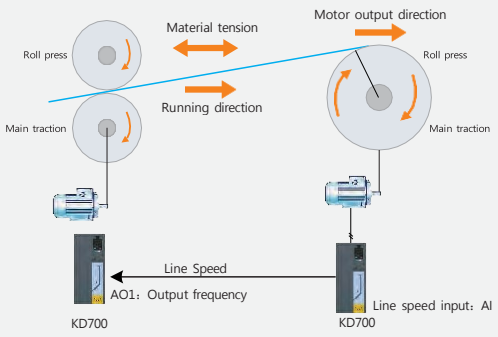


**Application ofthe thickness method:**

The front end machinery does not provide the traction mechan-ism to determine the line speed, the material line speed is directly determined by the front kick motor, and the material tension is determined by the KD700 winding.

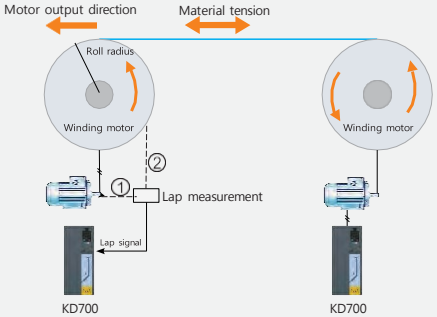

## FIRE MODE IN URGENT SITUATIONS

This safety feature prevents the VFD from shutting down for self-protection. Instead, the drive will continue the vital fan operation even with a control signal, warning or alarm. Fire mode are critical to ensuring safer evacuation of people from buildings in the event of a fire.

Activating the "Fire Mode" function in SIMATIC MOTION drives ensures safe and continuous operation in applications such as parking  lot exhaust fans, smoke extraction and essential service functions.

Semi-transverse ventilation system in normal mode

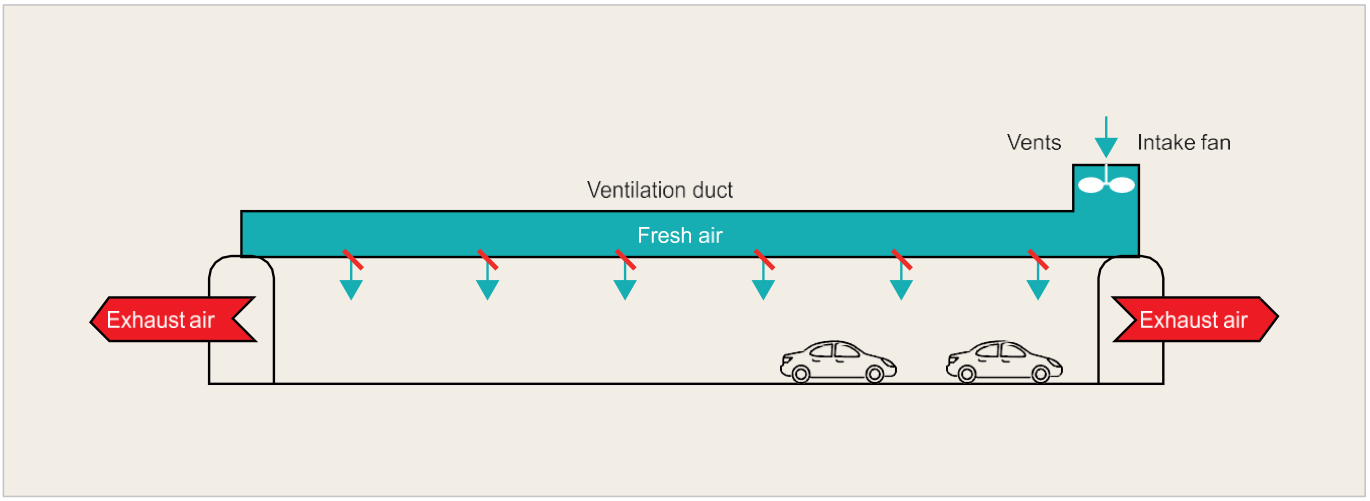


Semi-transverse ventilation system in case of fire

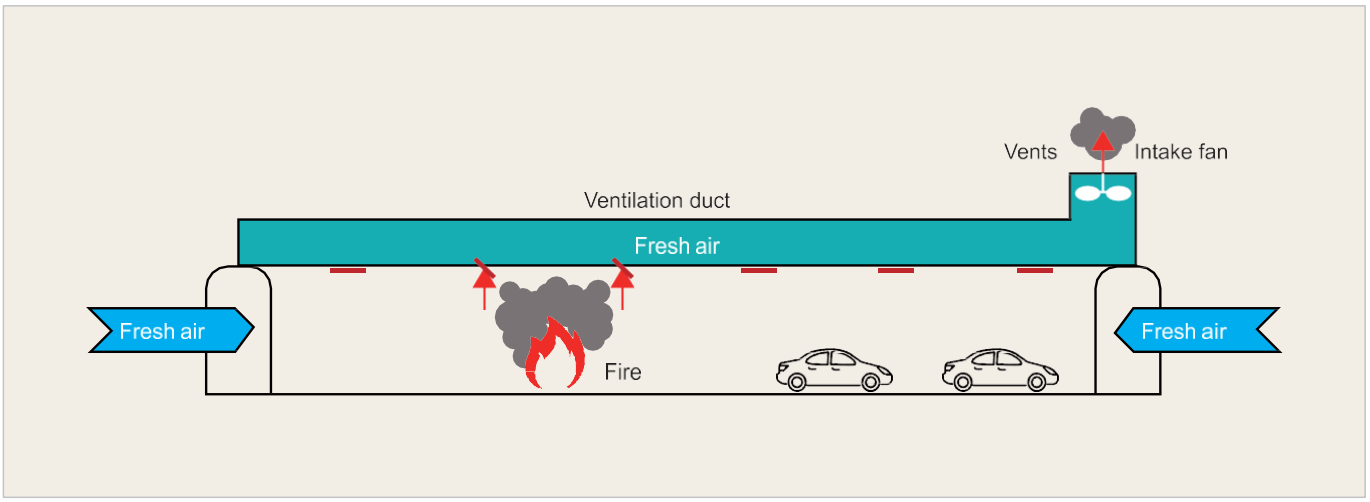


All Our Series Support Fire Mode, Including KD600M & KD700 & IP65 etc.

KD700 adopts modular design, and the control board and drive board are independent modules. There is no need for screws and cables to connect them, which can greatly simplify the after-sales workload and solve customer problems more quickly. For example, if the customer's vfd has a problem, you only need to disassemble the control board base and the entire module, without screwing or disassembling the cables, which is very convenient.




☑ click parameter download and

☑color LCD keyboard with built-in multiple languages (Chinese, English, Russian);

☑ customization of monitoring pages, which can be locally plugged in or externally wired.

## TECHNICAL SPECIFICATION

| | Project | Description |
|---|---|---|
| Control characteristics | Highest frequency | Vector control: 0 ~ 600Hz<br>VF control: 0 ~ 1200Hz |
| | Carrier frequency | 1K ~ 16kHz; the carrier frequency can be adjusted automatically according to the load characteristics. |
| | Input frequency resolution | Digital setting: 0.01Hz<br>Analog setting: maximum frequency × 0.1% |
| | Control mode | V/F control;<br>Open loop vector control (SVC);<br>Closed loop vector control (FVC) |
| | Motor type | Asynchronous motor, permanent magnet synchronous motor |
| | Starting torque | G type machine: 0.5Hz/180% (Open-loop/closed-loop vector control)<br>P type machine: 0.5Hz/120% (open loop vector control) |
| | Speed range | 1: 200 (open-loop vector control);<br>1: 1000 (closed-loop vector control); |
| | Textile swing frequency control | Multiple triangular wave frequency control functions |
| | Fixed length control function | Built in fixed length control module |
| | Quick current limiting function | Built in fast current limiting algorithm reduces the probability of overcurrent reporting in the frequency converter and improves the overall anti-interference ability of the machine |
| | Timed control | Timer control function: Set time range from 0h to 65535h |
| | Standardization of keyboard extension cords | Customers can extend the keyboard using standard Ethernet cables on their own. |
| | Run Command Channel | Three channels: operation panel given, control terminal given, and serial communication port given. Can be switched in multiple ways |
| | Frequency source | There are a total of 10 frequency sources: digital given, analog voltage given, analog current given, pulse given, and serial port given. Can be switched in multiple ways |
| | Auxiliary frequency source | Synchronous and asynchronous integration, combining heavy and light loads |
| | Functional characteristics | Synchronous and asynchronous integration, combining heavy and light loads<br>Quick settings for application macros such as fire mode, elevator mode, tension control mode, etc |

## TECHNICAL SPECIFICATION

| | Project | Description |
|---|---|---|
| Input and output | External analog power supply | +10V, load capacity 100mA |
| | External digital power supply | +24V, load capacity 200mA |
| | Digital input | D1- DI7 multifunctional editable digital input terminal, HDI high-speed pulse input |
| | Digital output | FM · Pulse output or open collector switch output can be selected |
| | Digital terminal power mode | NPN or PNP can be selected |
| | Analog input | Two analog inputs, voltage 0-10V or current 0/4-20mA selectable |
| | Analog output | Two analog outputs, voltage 0-10V or current 0/4-20mA selectable |
| | Programmable relay output | Two relay outputs, contact capacity: 250VAC/3A or 30DC/1A |
| | Fire fighting mode | STO1 - +24V · STO2 - +24V |
| | Compatible with multiple encoders | Optional collector open circuit ABZ encoder card, differential input ABZ encoder card, sine cosine encoder card, and rotary encoder card. |
| | Compatible with multiple communication protocols | Standard Modbus 485 communication protocol, with optional matching resistors<br>Optional bus modules and protocols such as Profinet, Probus, Ethercat, Can, Canopen, etc |
| Operation and Display | LED display | Dual digital display function parameter settings, status parameter viewing, and fault code viewing |
| | LCD display | Optional, language selection including Chinese/English /Russian |
| | Extended external display | Rj45 interface, LED or LCD selectable |
| | Parameter copying | Using LED LCD can achieve fast parameter replication |
| | Key locking and function selection | Implement partial or complete locking of keys, define the scope of action of some keys to prevent accidental operation |
| Protection function | Overpressure stall | Automatic control of bus voltage to prevent overvoltage faults |
| | Automatic current limiting protection | Automatic output current limitation to prevent overcurrent faults |
| | Overload pre alarm and warning | Overload early warning and protection |
| | Output load drop protection | Load drop alarm function |
| | Input and output phase loss protection | Automatic detection and alarm function for input and output phase loss |
| | Brake fault protection | Brake detection and alarm function |
| | Process PID given, feedback, loss detection | Process PID automatic identification of whether the given and feedback are lost, and loss alarm function |
| | Output ground short circuit protection | Effective protection function against ground short circuit output |
| | Output phase to phase short circuit protection | Effective protection function for output phase to phase short circuit |
| Environmental | Place of use | Indoor, not exposed to direct sunlight, free from dust, corrosive gases, flammable gases, oil mist, water vapor, dripping or salt, etc |
| | Altitude | Below 1000 meters, downgrading is required for use above 1000 meters |
| | Ambient temperature | -10 ℃~+50 ℃ (ambient temperature is between 40 ℃~50 ℃, please reduce the rating for use) |
| | Humidity | Less than 95% RH, no condensation of water droplets |
| | Vibration | Less than 5.9 meters per second (0.6g) |
| | Storage temperature | - 20℃ ~ + 60℃ |
| | Class of pollution | Level 2 (dry, non-conductive dust pollution) |
| | Protection level | IP20 |
| Standards | Product compliance with safety standards | IEC61800-5-1:2007 |
| | The product complies with EMC standards | IEC61800-3:2005 |

## BASIC CONNECTION

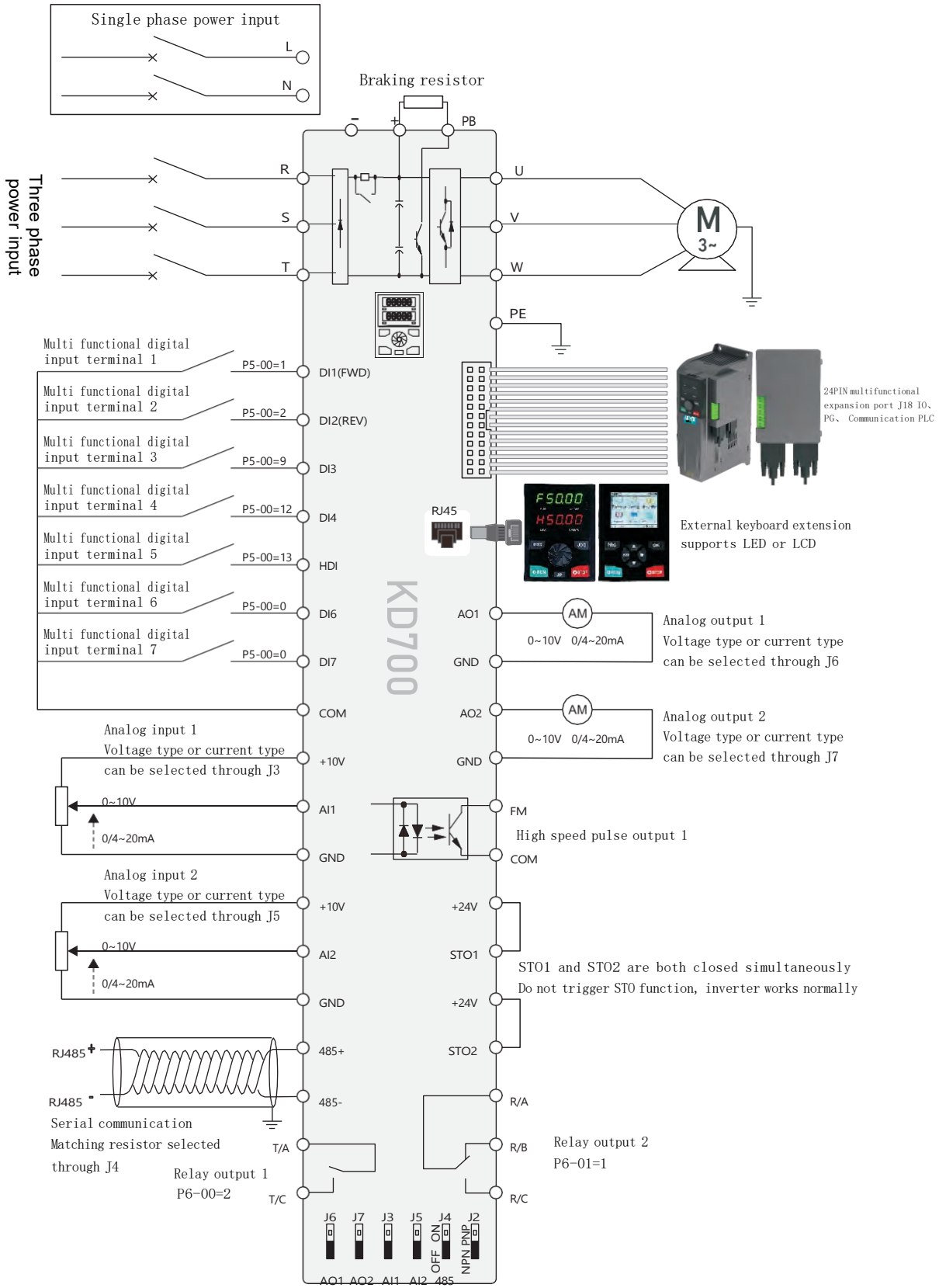

# MODEL AND SIZE

A

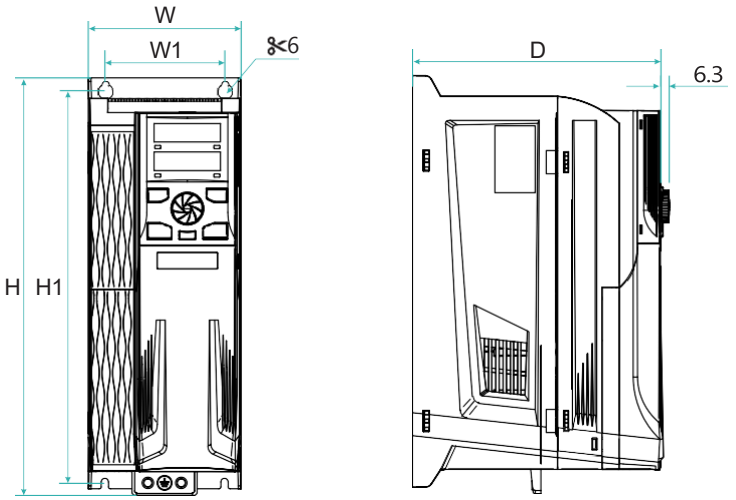


B

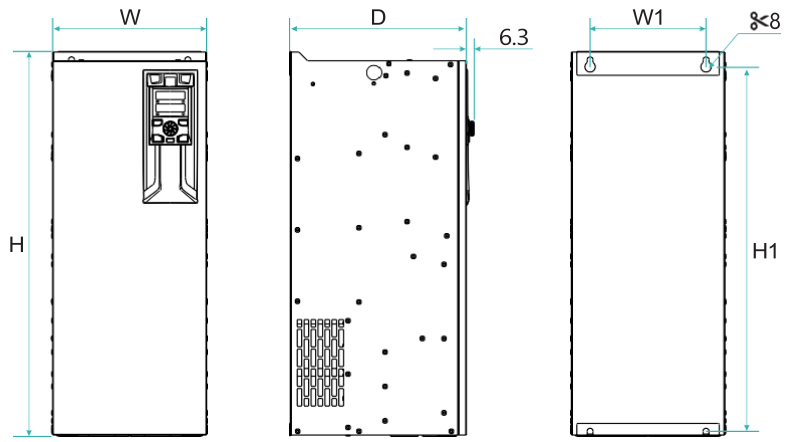


C

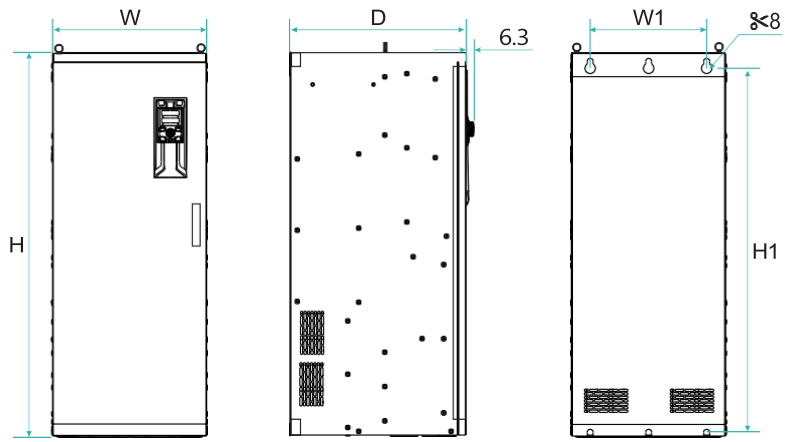

## MODEL AND SIZE

# 2S

| AC Drive Model | Adapter motor (KW) | Rated capacity (KVA) | Rated Input Current (A) | Rated Output Current(A) | Installation size(mm) W1 | Installation size(mm) H1 | Dimensions (mm) W | Dimensions (mm) H | Dimensions (mm) D | Aperture d | Frame NO. |
|---|---|---|---|---|---|---|---|---|---|---|---|
| Input voltage: single-phase 220V Range：-15%~20% | | | | | | | | | | | |
| KD700-2S-0.4GB | 0.4 | 1 | 5.4 | 2.3 | 66 | 190 | 80 | 200 | 138 | 4.5 | A |
| KD700-2S-0.75GB | 0.75 | 1.5 | 8.2 | 4 | | | | | | | |
| KD700-2S-1.5GB | 1.5 | 2.8 | 14 | 7 | | | | | | | |
| KD700-2S-2.2GB | 2.2 | 3.8 | 23 | 9.6 | | | | | | | |
| KD700-2S-4.0GB | 4.0 | 5.9 | 40 | 17 | 80 | 250 | 98 | 260 | 170 | 4.5 | |
| KD700-2S-5.5GB | 5.5 | 8.5 | 60 | 25 | 90 | 300 | 115 | 310 | 187 | 5.5 | |
| KD700-2S-7.5GB | 7.5 | 10.5 | 75 | 32 | | | | | | | |

# 2T

| AC Drive Model | Adapter motor (KW) | Rated capacity (KVA) | Rated Input Current(A) | Rated Output Current(A) | Installation size(mm) W1 | Installation size(mm) H1 | Dimensions (mm) W | Dimensions (mm) H | Dimensions (mm) D | Aperture d | Frame NO. |
|---|---|---|---|---|---|---|---|---|---|---|---|
| Input voltage: three-phase 220V Range: -15%~20% | | | | | | | | | | | |
| KD700-2T-0.4GB | 0.4 | 1 | 2.7 | 2.1 | 66 | 190 | 80 | 200 | 138 | 4.5 | A |
| KD700-2T-0.7GB | 0.7 | 1.5 | 4.2 | 3.8 | | | | | | | |
| KD700-2T-1.5GB | 1.5 | 2.8 | 7.7 | 7 | | | | | | | |
| KD700-2T-2.2GB | 2.2 | 3.8 | 12 | 9 | | | | | | | |
| KD700-2T-4.0GB | 4.0 | 5.9 | 19 | 17 | 80 | 250 | 98 | 260 | 170 | 4.5 | |
| KD700-2T-5.5GB | 5.5 | 8.5 | 28 | 25 | 90 | 300 | 115 | 310 | 187 | 5.5 | |
| KD700-2T-7.5GB | 7.5 | 10.5 | 35 | 32 | | | | | | | |
| KD700-2T-11GB | 11 | 14.5 | 47 | 45 | 140 | 384 | 165 | 395 | 210 | 6 | |
| KD700-2T-15GB | 15 | 19.5 | 65 | 60 | 160 | 425 | 220 | 440 | 220 | 7 | |
| KD700-2T-18.5GB | 18.5 | 24 | 80 | 75 | | | | | | | |
| KD700-2T-22G | 22 | 28.5 | 97 | 90 | 160 | 535 | 145 | 550 | 255 | 7 | |
| KD700-2T-30G | 30 | 39 | 115 | 110 | 200 | 640 | 265 | 660 | 305 | 10 | B |
| KD700-2T-37G | 37 | 48 | 166 | 152 | | | | | | | |
| KD700-2T-45G | 45 | 58.5 | 190 | 176 | 200 | 765 | 300 | 785 | 305 | 10 | |
| KD700-2T-55G | 55 | 71.5 | 214 | 210 | | | | | | | |
| KD700-2T-75G | 75 | 97.5 | 307 | 304 | 280 | 815 | 340 | 835 | 325 | 10 | |
| KD700-2T-93G | 93 | 121 | 389 | 377 | 300 | 895 | 410 | 915 | 370 | 12 | |
| KD700-2T-110G | 110 | 143 | 435 | 426 | | | | | | | |
| KD700-2T-132G | 132 | 171.5 | 468 | 465 | 320 | 995 | 470 | 1015 | 385 | 12 | |
| KD700-2T-160G | 160 | 208 | 590 | 585 | 500 | 1115 | 640 | 1135 | 395 | 12 | |
| KD700-2T-200G | 200 | 260 | 785 | 725 | | | | | | | |
| KD700-2T-220G | 220 | 286 | 883 | 820 | | | | | | | |

# 4T

| AC Drive Model | Adapter motor (KW) | Rated capacity (KVA) | Rated Input Current (A) | Rated Output Current (A) | Installation size (mm) W1 | Installation size (mm) H1 | Dimensions (mm) W | Dimensions (mm) H | Dimensions (mm) D | Aperture d | Frame NO. |
|---|---|---|---|---|---|---|---|---|---|---|---|
| Input voltage: three-phase 380V Range: -15%~20% | | | | | | | | | | | |
| KD700-4T-0.7GB/1.5PB | 0.7 | 1.5/2.5 | 3.4/5 | 2.1/3.8 | 66 | 190 | 80 | 200 | 138 | 4.5 | |
| KD700-4T-1.5GB/2.2PB | 1.5 | 2.5/3.4 | 5/5.8 | 3.8/5.1 | | | | | | | |
| KD700-4T-2.2GB/4.0PB | 2.2 | 3.4/5.9 | 5.8/10.5 | 5.1/9 | | | | | | | |
| KD700-4T-4.0GB/5.5PB | 4.0 | 5.9/8.5 | 10.5/14.6 | 9/13 | 80 | 250 | 98 | 260 | 170 | 4.5 | A |
| KD700-4T-5.5GB/7.5PB | 5.5 | 8.5/11 | 14.6/20.5 | 13/17 | | | | | | | |
| KD700-4T-7.5GB/11PB | 7.5 | 11/13.5 | 20.5/26 | 17/25 | | | | | | | |
| KD700-4T-11GB/15PB | 11 | 13.5/16 | 26/35 | 25/32 | 90 | 300 | 115 | 310 | 187 | 5.5 | |
| KD700-4T-15GB/18.5PB | 15 | 16/21 | 35/38.5 | 32/37 | | | | | | | |
| KD700-4T-18.5GB/22PB | 18.5 | 21/24 | 38.5/46.5 | 37/45 | 140 | 384 | 165 | 395 | 210 | 6 | |
| KD700-4T-22GB/30PB | 22 | 24/30 | 46.5/62 | 45/60 | | | | | | | |
| KD700-4T-30GB/37PB | 30 | 30/39 | 62/76 | 60/75 | 160 | 425 | 220 | 440 | 220 | 7 | |
| KD700-4T-37GB/45PB | 37 | 39/49 | 76/92 | 75/90 | | | | | | | |
| KD700-4T-45G(B)/55P(B) | 45 | 49/59 | 92/113 | 90/110 | 160 | 535 | 145 | 550 | 255 | 7 | |
| KD700-4T-55G(B)/75P(B) | 55 | 59/72 | 113/157 | 110/152 | 200 | 640 | 265 | 660 | 305 | 10 | |
| KD700-4T-75G(B)/93P(B) | 75 | 72/100 | 157/180 | 152/176 | | | | | | | |
| KD700-4T-93G(B)/110P(B) | 90 | 100/116 | 180/214 | 176/210 | 200 | 765 | 300 | 785 | 305 | 10 | |
| KD700-4T-110G(B)/132P(B) | 110 | 116/138 | 214/256 | 210/253 | | | | | | | |
| KD700-4T-132G(B)/160P(B) | 132 | 138/167 | 256/307 | 253/304 | 280 | 815 | 340 | 835 | 325 | 10 | |
| KD700-4T-160G(B)/185P(B) | 160 | 167/200 | 307/345 | 304/340 | | | | | | | |
| KD700-4T-185G/200P | 185 | 200/225 | 345/385 | 340/377 | 300 | 895 | 410 | 915 | 370 | 12 | B |
| KD700-4T-200G/220P | 200 | 225/280 | 385/430 | 377/426 | | | | | | | |
| KD700-4T-220G/250P | 220 | 280/309 | 430/468 | 426/465 | | | | | | | |
| KD700-4T-250G/280P | 250 | 309/349 | 468/525 | 465/520 | 320 | 995 | 470 | 1015 | 385 | 12 | |
| KD700-4T-280G/315P | 280 | 349/398 | 525/590 | 520/585 | | | | | | | |
| KD700-4T-315G/355P | 315 | 398/434 | 590/665 | 585/650 | 500 | 1115 | 640 | 1135 | 395 | 12 | |
| KD700-4T-355G/400P | 350 | 434/494 | 665/785 | 650/725 | | | | | | | |
| KD700-4T-400G/450P | 400 | 494/560 | 785/883 | 725/820 | | | | | | | |
| KD700-4T-450G/500P | 450 | 560/615 | 883/920 | 820/900 | | | | | | | |
| KD700-4T-500G/550P | 500 | 615/676 | 920/1020 | 900/1000 | / | / | 800 | 1800 | 500 | Vertical | |
| KD700-4T-550G/630P | 550 | 676/775 | 1020/1120 | 1000/1100 | | | | | | | |
| KD700-4T-630G | 630 | 775 | 1200 | 1150 | | | | | | | |
| KD700-4T-710G | 710 | 870 | 1315 | 1250 | / | / | 1100 | 2200 | 600 | Vertical | C |
| KD700-4T-800G | 800 | 980 | 1560 | 1450 | | | | | | | |
| KD700-4T-900G | 710 | 1100 | 1760 | 1710 | / | / | 1300 | 2300 | 600 | Vertical | |
| KD700-4T-1000G | 800 | 1230 | 1960 | 1900 | | | | | | | |

# KD700 Series Boost inverter

| AC Drive Model | Adapter motor (KW) | Rated capacity (KVA) | Rated Input Current (A) | Rated Output Current (A) | Installation size (mm) W1 | Installation size (mm) H1 | Dimensions (mm) W | Dimensions (mm) H | Dimensions (mm) D | Aperture d | Frame NO. |
|---|---|---|---|---|---|---|---|---|---|---|---|
| 2S/4T 220V Single phase input & 380V Three Phase output | | | | | | | | | | | |
| KD700-2S/4T-0.75G | 0.75 | 2.5 | 7.3 | 2.3 | 66 | 190 | 80 | 200 | 138 | 4.5 | |
| KD700-2S/4T-1.5G | 1.5 | 3.4 | 13.3 | 3.8 | | | | | | | |
| KD700-2S/4T-2.2G | 2.2 | 5.9 | 17.9 | 5.1 | 80 | 250 | 98 | 260 | 170 | 4.5 | |
| KD700-2S/4T-3.7G | 3.7 | 8.5 | 31.5 | 9 | | | | | | | |
| KD700-2S/4T-5.5G | 5.5 | 13.5 | 45.5 | 13 | 90 | 300 | 115 | 310 | 187 | 5.5 | A |
| KD700-2S/4T-7.5G | 7.5 | 16 | 59.5 | 17 | | | | | | | |
| KD700-2S/4T-11G | 11 | 16 | 87.5 | 25 | | | | | | | |
| KD700-2S/4T-15G | 15 | 21 | 112 | 32 | 140 | 384 | 165 | 395 | 210 | 6 | |
| KD700-2S/4T-18.5G | 18.5 | 24 | 129.5 | 37 | | | | | | | |
| KD700-2S/4T-22G | 22 | 30 | 157.5 | 45 | 160 | 425 | 220 | 440 | 220 | 7 | B |
| KD700-2S/4T-30G | 30 | 39/49 | 210 | 60 | | | | | | | |
| KD700-2S/4T-37G | 37 | 49/59 | 262.5 | 75 | 160 | 535 | 145 | 550 | 255 | 7 | |

# KD700-2SS Series

| AC Drive Model | Adapter motor (KW) | Rated capacity (KVA) | Rated Input Current (A) | Rated Output Current (A) | Installation size (mm) W1 | Installation size (mm) H1 | Dimensions (mm) W | Dimensions (mm) H | Dimensions (mm) D | Aperture d | Frame NO. |
|---|---|---|---|---|---|---|---|---|---|---|---|
| 2SS 220V Single Phase Input & Single Phase Output | | | | | | | | | | | |
| KD700-2SS-1.5G | 1.5 | 2.5 | 7.6 | 7 | 66 | 190 | 80 | 200 | 138 | 4.5 | |
| KD700-2SS-2.2G | 2.2 | 3.4 | 12 | 9.6 | | | | | | | |
| KD700-2SS-4.0G | 4.0 | 8.5 | 19 | 17 | 80 | 250 | 98 | 260 | 170 | 4.5 | |
| KD700-2SS-5.5G | 5.5 | 13.5 | 28 | 25 | 90 | 300 | 115 | 310 | 187 | 5.5 | A |
| KD700-2SS-7.5G | 7.5 | 16 | 35 | 32 | | | | | | | |
| KD700-2SS-11G | 11 | 21 | 47 | 45 | 140 | 384 | 165 | 395 | 210 | 6 | |
| KD700-2SS-15G | 15 | 30 | 65 | 60 | 160 | 425 | 220 | 440 | 220 | 7 | |

SIMATIC motion

ELEVATOR
THE POWER



# B5-13=1
# KD700 USED FOR

## Dedicated AC Drive

For elevator,escalator and hoist

KD700E are specific for passenger and freight elevators installed in residential buildings, shopping malls, and office buildings. The drives can be programmed to have a commendable leveling even they adopt open-loop control, reducing the cost of additional devices. Flexible S-curve program greatly improves comfortability for the elevator users. All elevator parameters gathered in one chapter in the user manual, and well furnished parameter default values make the commissioning easy and fast.

### COMPATIBILITY

Asynch motor control applicable
Synchronous motor Control

### POWER RATINGS

1×220 - 240V 0.4 - 75kW
3×380 - 480V 0.75 - 800kW

### CONTROL TECHNOLOGY

V/Hz SVC1 SVC2

## FEATURES

### 01 Safety and reliability

Safty at KD700E has the highest priority since we understand they are dedicated for passenger elevators. Through enable signal, the drive will enable the run of the motor only when the motor run contactor, all safty contactors are well closed. 220V AC UPS power supply, emergency speed, and inspection speed are supported or programmable at KD700E series, a full coverage on the safty requirement at the drive side.




### 02 Dedicated control sequence

Lift dedicated control sequence, big output torque at low frequency of V/Hz mode, and fast response time make the elevator motion stable and smooth.



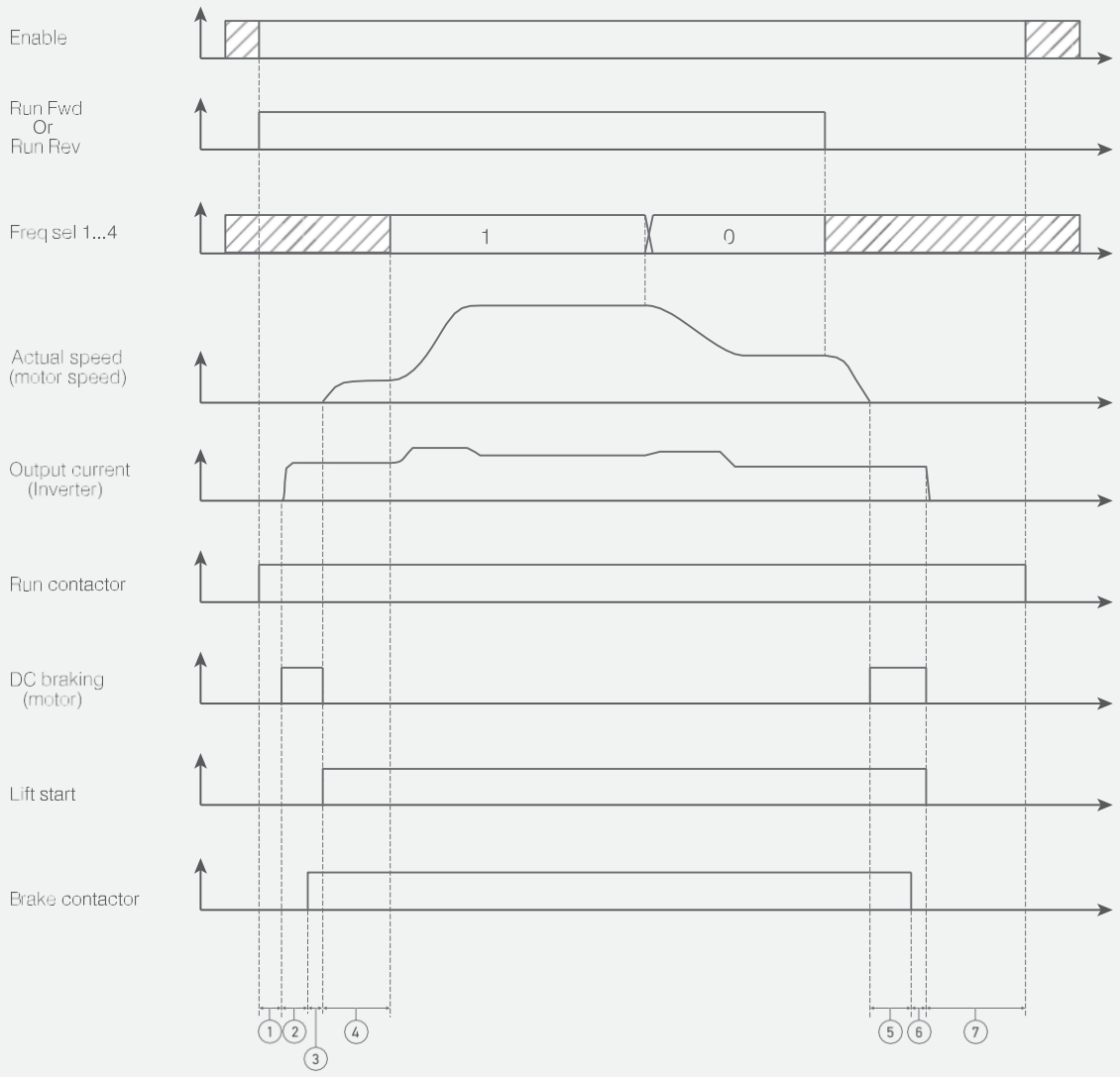


① Cont close delay
② Magnet time
③ Brake open delay
④ Smooth start delay
⑤ Brake waiting time
⑥ Brake close delay
⑦ Cont open delay

## 03 Commendable leveling

Fast response time, programmable S-curve, slip compensation separated for elevator uplink or downlink make the car a commendable leveling for different motor brands.

## 04 Silky smoothness

Smoothness at the start and stop is quite important and the main reason for the users to select the drive or not. KD700E have a lot of approaches to program the smoothness at the start and stop, like smooth start frequency, DC injection brake, torque boost, V/Hz mode, brake sequency, and so forth.

## 05 Emergency and inspection speed programmable

If the grid power supply is suddenly lost, the drive will get into emergency mode and run at the emergency speed via UPS power supply. Inspection speed can also be programmed via multi-speed selections.

## 06 STO Function Built In

Compliant with IEC 62061-SIL3,Enhancing safety by immediately shutting off torque output to the connected motor, making it an effective measure for preventing accidents in industrial settings.

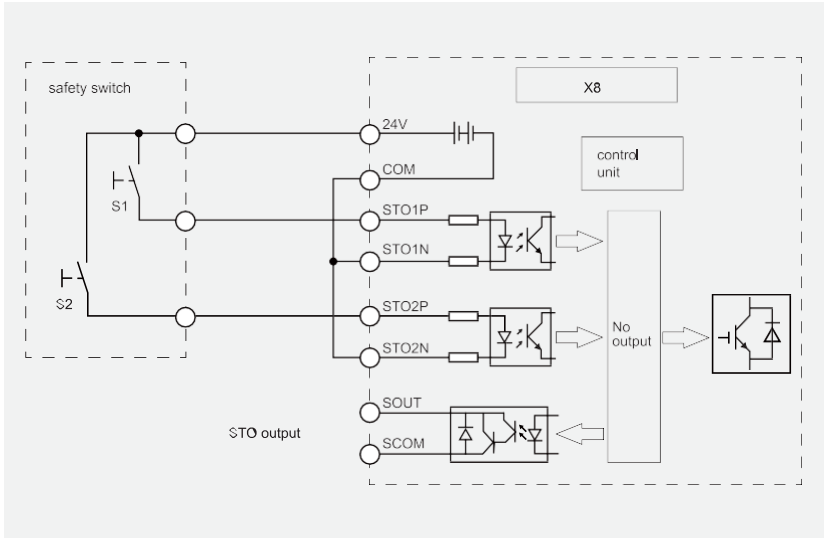


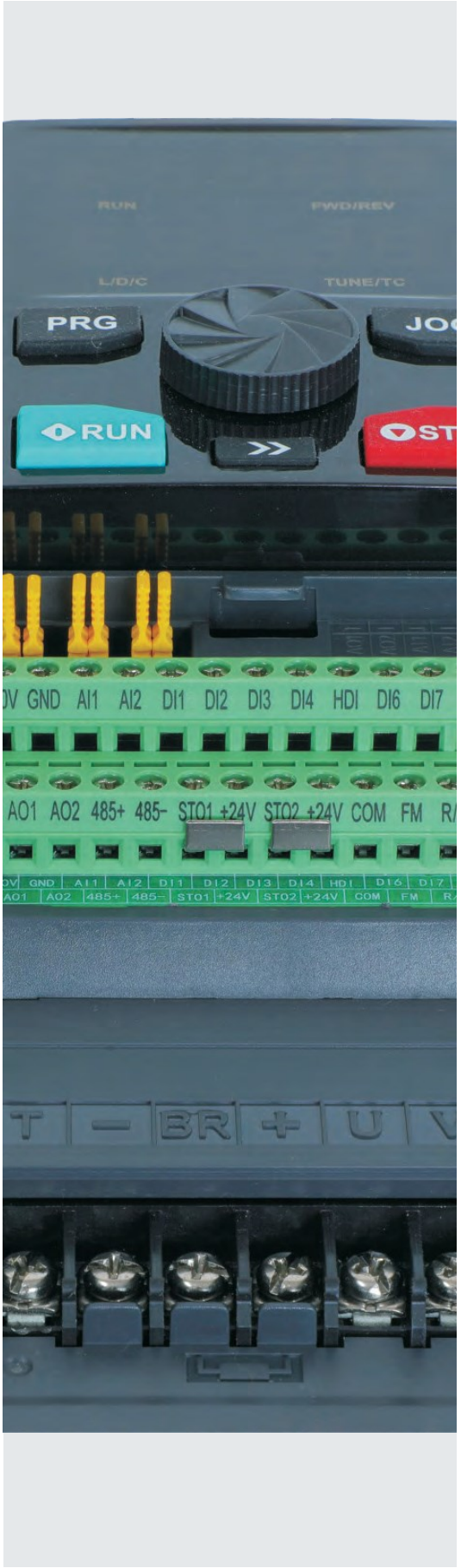

# BASIC CONNECTION

Following is the default wiring diagram for KD700E.

## SINGLE MULTI-SPEED TERMINAL ELEVATOR CONTROLLER

For the elevator controller with only one multi-segment speed changing terminal, the high-speed segment and the layer speed segment are controlled by the on-off of the high-speed terminal. The wiring diagram of such elevator controller and frequency converter is as follows:

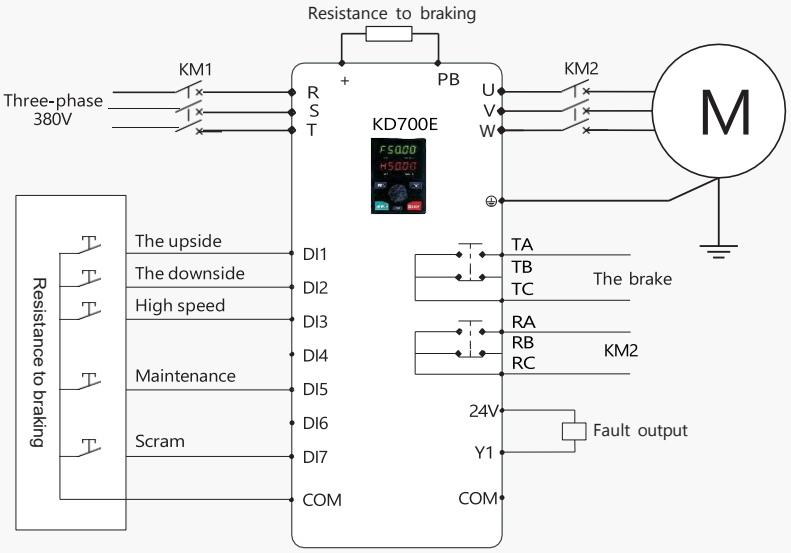


## DOUBLE MULTI-SPEED TERMINAL ELEVATOR CONTROLLER

For the elevator controller with two multi-speed changing terminals, its high speed is controlled by the on-off of one termi-nal, and the other terminal is to control the flat speed or zero speed according to different controllers. The wiring diagram of the elevator controller and frequency converter with two multi-speed terminals is as follows:

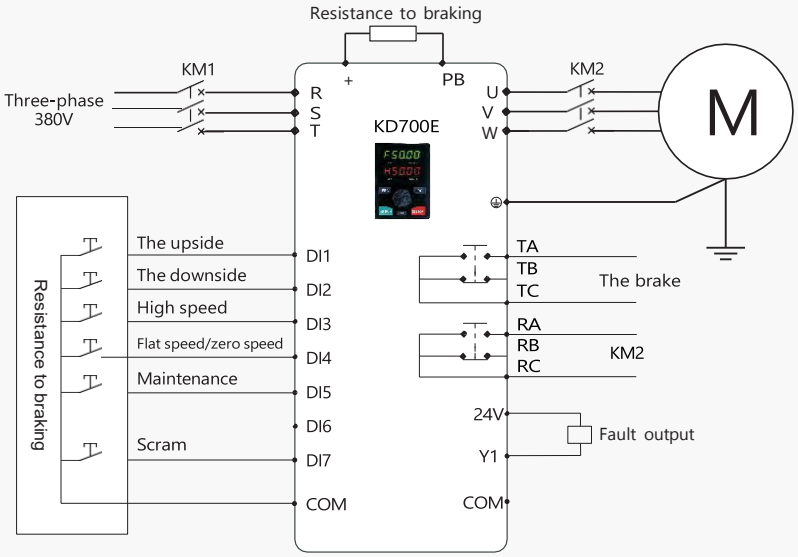

## EMERGENCY OPERATION MODE

When the elevator is in use, if the system's power supply suddenly fails, it may result in passengers being locked in the car.KD700E series elevator inverter can support the emergency UPS power supply operation for emergency power outage operati-on, and the emergency signal can be received by the inverter terminal DI6. The wiring diagram is as follows:

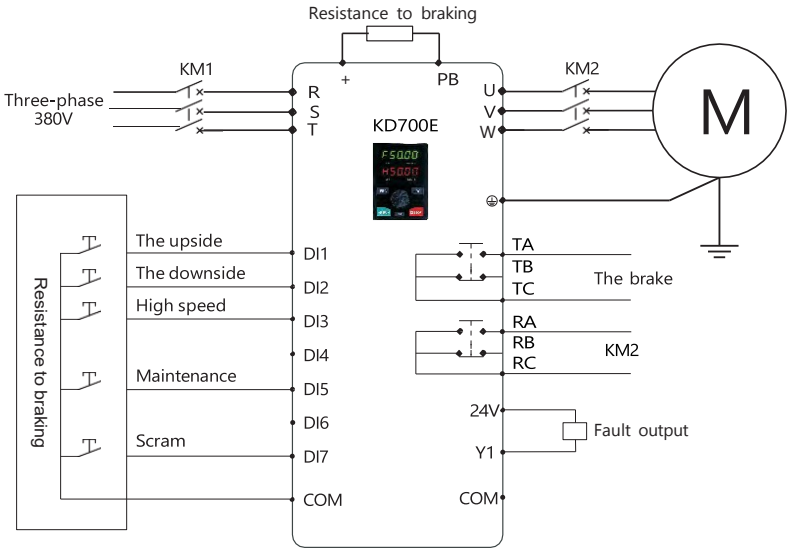


## CLOSED LOOP ELEVATOR CONTROL

KD700E series elevator inverter can support closed-loop control, and provides a variety of PG cards for use with different encoders. Please refer to Chapter 5 of KD600 series User manual for PG card information. The wiring diagram of elevat-or controller and frequency converter for closed-loop elevator control is shown in the following figure:

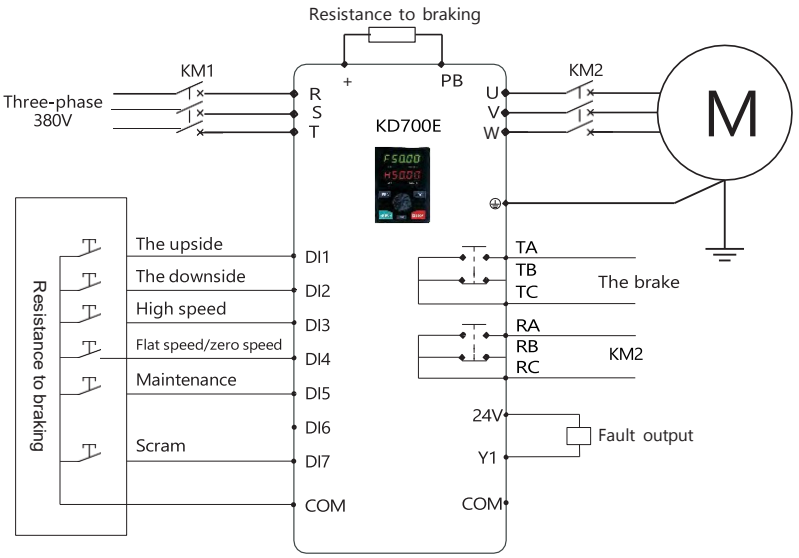

SIMATIC motion



# CRANE



## B5-00=1 KD700 USED FOR

Crane specific AC Drive

The KD700C series hoisting inverter is a special software integrated in our general purpose KD700 model, just need simply change a parameter to use it. This series integrates a variety of industry application functions including brake control, anti-hook detection, light load speed increase and heavy load speed reduction, zero servo, crane travel anti-sway and tower crane rotation, etc., to ensure the safety, reliability and efficient operation of the lifting equipment.

This product adopts international leading control technology, and its performance reaches the level of international high-end inverters, supporting induction motor and permanent magnet synchronous motor drive. It is equipped with a variety of expansion cards such as PG card, communication card I/O expansion card to meet diverse application needs. The product has a high power density design, and some power segments have built-in braking units to save installation space. At the same time, the product meets the environmental protection requirements of low noise and low electromagnetic interference through electromagnetic compatibility optimization design, and has the ability to adapt to harsh power grids, temperature, humidity and dust environments, which significantly improves product reliability.

KD700C series products have been widely used in general lifting equipment (gantry cranes, European cranes, various types of hoists, etc.), port lifting equipment (shore cranes, yard cranes, portal cranes, tipping container spreaders, etc.), construction lifting equipment (tower cranes, construction elevators, etc.), and mining lifting equipment (mine hoists, winches, belt conveyors, etc.).

## COMPATIBILITY

Asynch motor control applicable
Synchronous motor Control

## POWER RATINGS

| | |
|---|---|
| 1×220 - 240V | 0.4 - 75kW |
| 3×380 - 480V | 0.75 - 800kW |

## CONTROL TECHNOLOGY

V/Hz SVC1 SVC2



# Leading technology, improving efficiency

## 01 Professional brake timing control

The frequency converter will only activate the brake when both the frequency and current of the release/hold brake are met, and a delay before and after releasing/reporting the brake is added to ensure the safe and smooth start and stop of the equipment;

Under the precise control of closed-loop vectors, a pre torque current is output before releasing/reporting the brake to activate the brake. With a delay before and after releasing/reporting, the equipment is ensured to start and stop safely and smoothly.

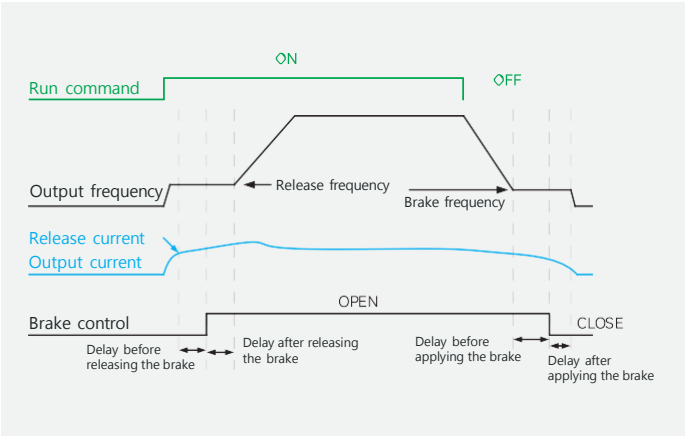


Open loop lifting control timing diagram

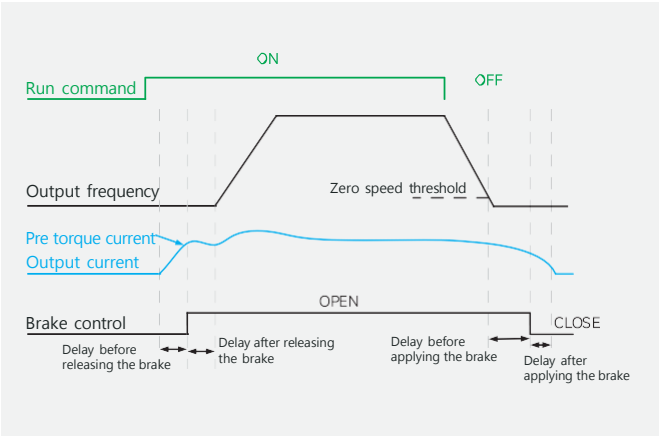


Closed loop lifting control timing diagram

## 02 Integrate anti sway technology for both large and small vehicles to improve equipment efficiency

Built in anti sway algorithm for large and small vehicles, which can effectively reduce the amplitude of cargo swinging during their movement, improve work efficiency and safety.

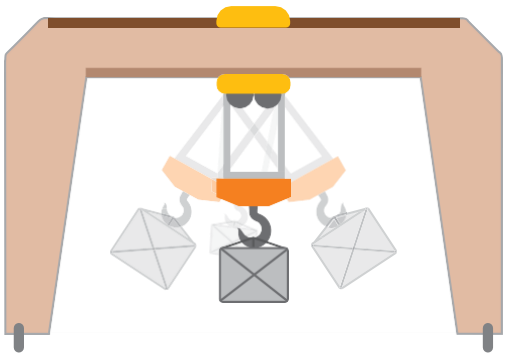

The anti sway function is not turned on

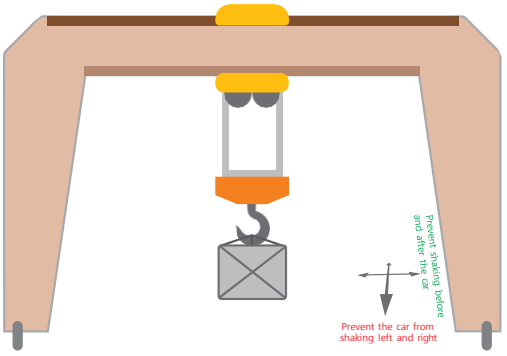


Anti sway function activated

## 03 Zero servo function ensures safe use

When the equipment is running, if there is a mechanical brake failure, inability to hold the brake in a timely manner, or inability to hold it tightly, the frequency converter immediately detects the rotation of the motor shaft and activates the zero servo function when it is powered on, causing the cargo or car to hover in the current position, while issuing an alarm to prompt the operators to take corresponding measures and provide safety protection for the operation of the equipment.



## 04 Intelligent anti roll algorithm, starting torque ≥150%, effectively avoiding the phenomenon of starting roll

Built in intelligent anti slip algorithm can achieve a 0.0Hz output of 150%+rated torque, and can operate stably under load at ultra-low speeds. The anti slip algorithm can enable the equipment to start with high torque and output high torque when operating under load or no-load, effectively avoiding the phenomenon of lifting equipment slipping during ascent and descent and ensuring safe operation of the equipment.

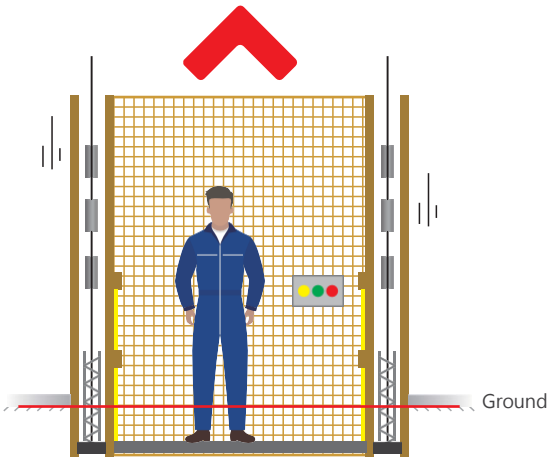


No anti slip algorithm

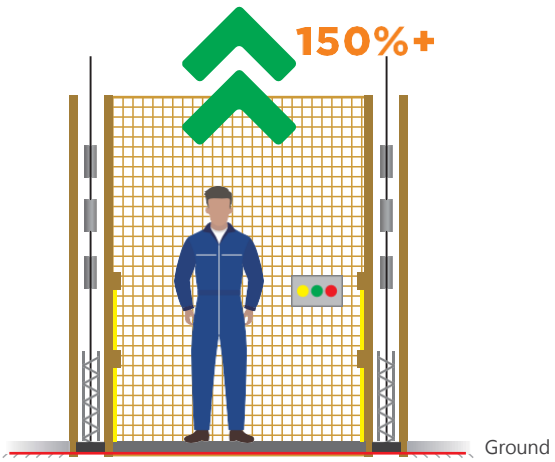


There is an anti slip algorithm

# Multi mode, multi integration

## 05

### Automatic acceleration under light load to improve efficiency, automatic deceleration under overload

Supporting constant power mode, it can automatically match the optimal operating speed according to the load situation during operation, automatically reduce speed under heavy load, and ensure the safety of goods and personnel; Automatic acceleration under light load to improve on-site operation efficiency.

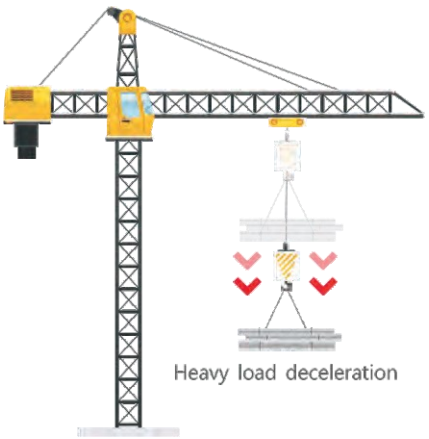


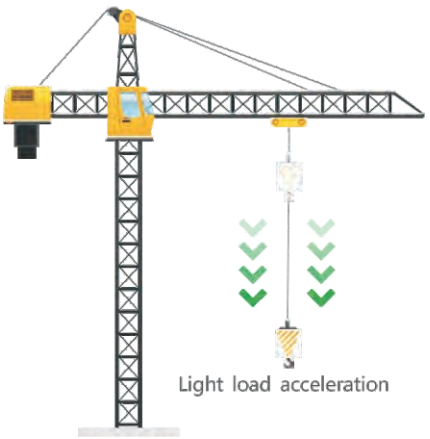


## 06

### Smooth acceleration and deceleration, smooth and stable operation

Supports linear and S-shaped curve acceleration and deceleration, with 4 sets of acceleration and deceleration times that can be easily set to match the acceleration and deceleration characteristics of lifting, walking and translation, construction lifting, tower crane rotation, and other sections, ensuring smooth operation of each section of the lifting equipment.

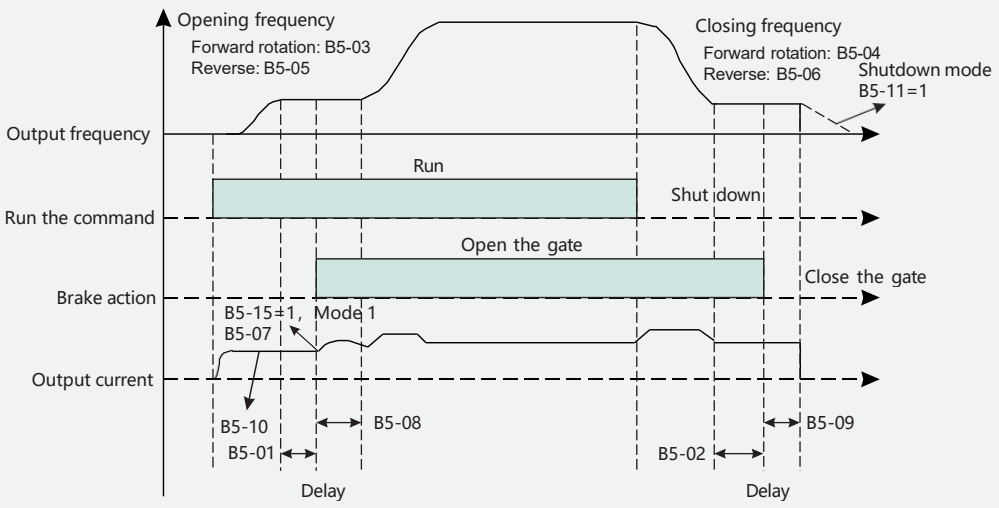

# Solution

## QUAY CRANE



The quay crane is a large-scale lifting equipment specifically designed for port terminals. It is installed on the shore track and efficiently loads and unloads container ships through a tall door frame structure. It has the functions of forward and backward movement and lifting, and is the core loading and unloading machinery of maritime container terminals.

### Product Configuration

KD700C series lifting dedicated frequency converter

KD700 series high-performance vector frequency converter

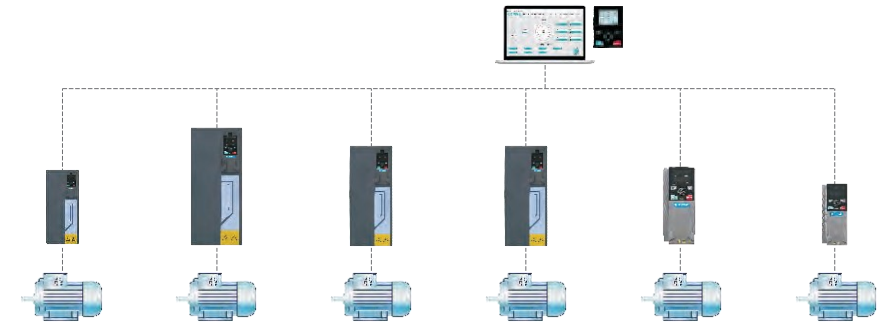


## FIELD BRIDGE CRANE



The gantry crane is a specialized container equipment used in ports and logistics yards. It is divided into track type (fixed route) and tire type (flexible movement), mainly used for horizontal handling, stacking, and loading and unloading of containers. It has the ability to cross container areas and improve the efficiency of yard cargo turnover.

### Product Configuration

KD700C series lifting dedicated frequency converter

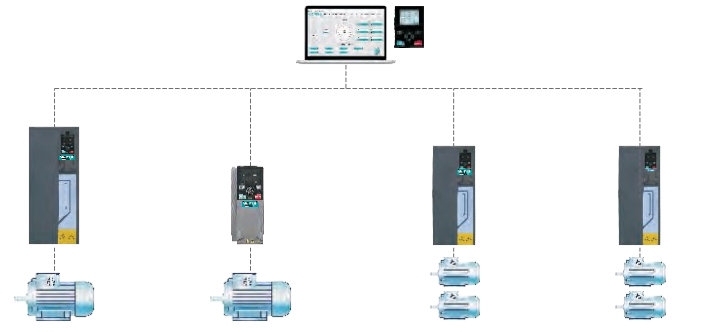

# Solution

## BRIDGE CRANE

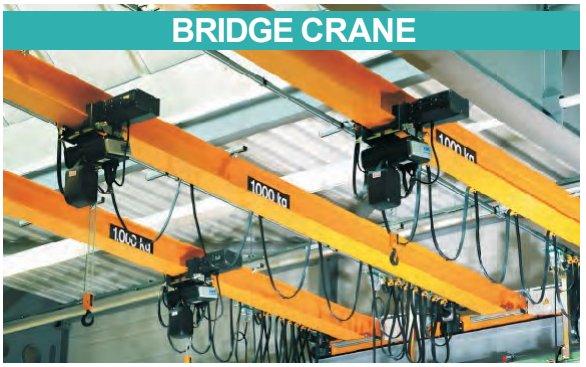

Bridge crane is a lifting equipment that is horizontally mounted above indoor spaces such as workshops and warehouses. The bridge runs along the tracks on both sides and is divided into single beam (lightweight and economical), double beam (heavy load), and ordinary/European style (low clearance design). It is widely used for material lifting and can be operated in conjunction with electric hoists or winches.

### Product Configuration

KD700C series lifting dedicated frequency converter

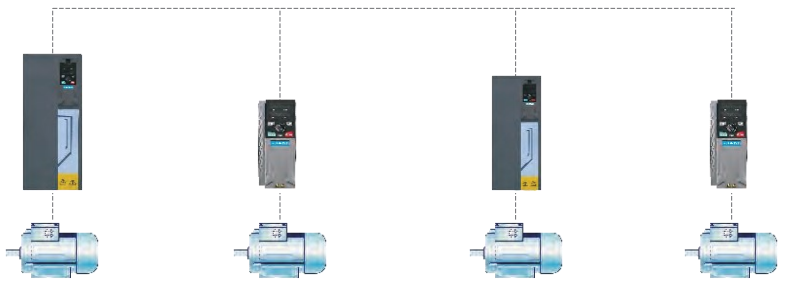


## GANTRY CRANE



The gantry crane is a specialized container equipment used in ports and logistics yards. It is divided into track type (fixed route) and tire type (flexible movement), mainly used for horizontal handling, stacking, and loading and unloading of containers. It has the ability to cross container areas and improve the efficiency of yard cargo turnover.

### Product Configuration

KD700C series lifting dedicated frequency converter

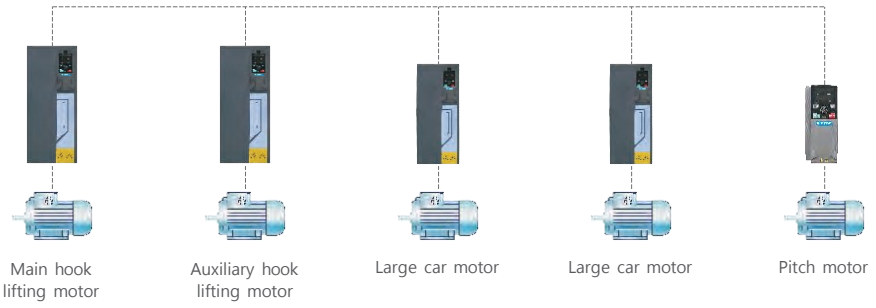

# Solution

## TOWER CRANE



Tower crane is a commonly used vertical transportation equipm-ent in construction, characterized by a vertical tower body and a horizontal lifting arm. The lifting arm can rotate 360 ° and can be raised as the floor rises. It is mainly used for lifting building materials such as steel bars, concrete, and pipes in high-rise buildings, and is divided into two forms: upper rotation and lower rotation.

### Product Configuration

KD700C series lifting dedicated frequency converter



Main hook lifting motor | Variable auxiliary motor | Rotary motor

## CONSTRUCTION LADDER



Construction ladder is a vertical transportation facility for personnel to go up and down in the construction site. It is mostly made of steel structure or aluminum alloy frame, equipped with protective railings and safety devices. It is divided into fixed (attached to the building) and mobile (removable and movable) to ensure the safe and convenient passage of personnel.

### Product Configuration

KD700C series lifting dedicated frequency converter

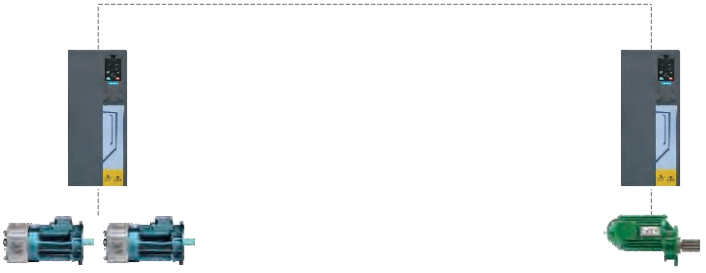

Single/multi drive construction elevator motor | Gourd and lifting equipment cone motor

SIMATIC motion







# C3-00=1
# KD700 USED FOR

## Dedicated AC Drive
## For solar pump

SP700 dedicated AC drive is a decent solution that takes use of solar power as a green and energy source for pumping water.

**COMPATIBILITY**

Synch motor control applicable

Asynch motor control applicable

**POWER RATINGS**

| | | |
|---|---|---|
| 150 - 400VDC / 200 - 240VAC | 1Phase | 0.4 - 2.2kW |
| 250 - 800VDC / 380 - 460VAC | 3Phase | 0.4 - 75kW |

**CONTROL TECHNOLOGY** V/Hz SVC for synch motor

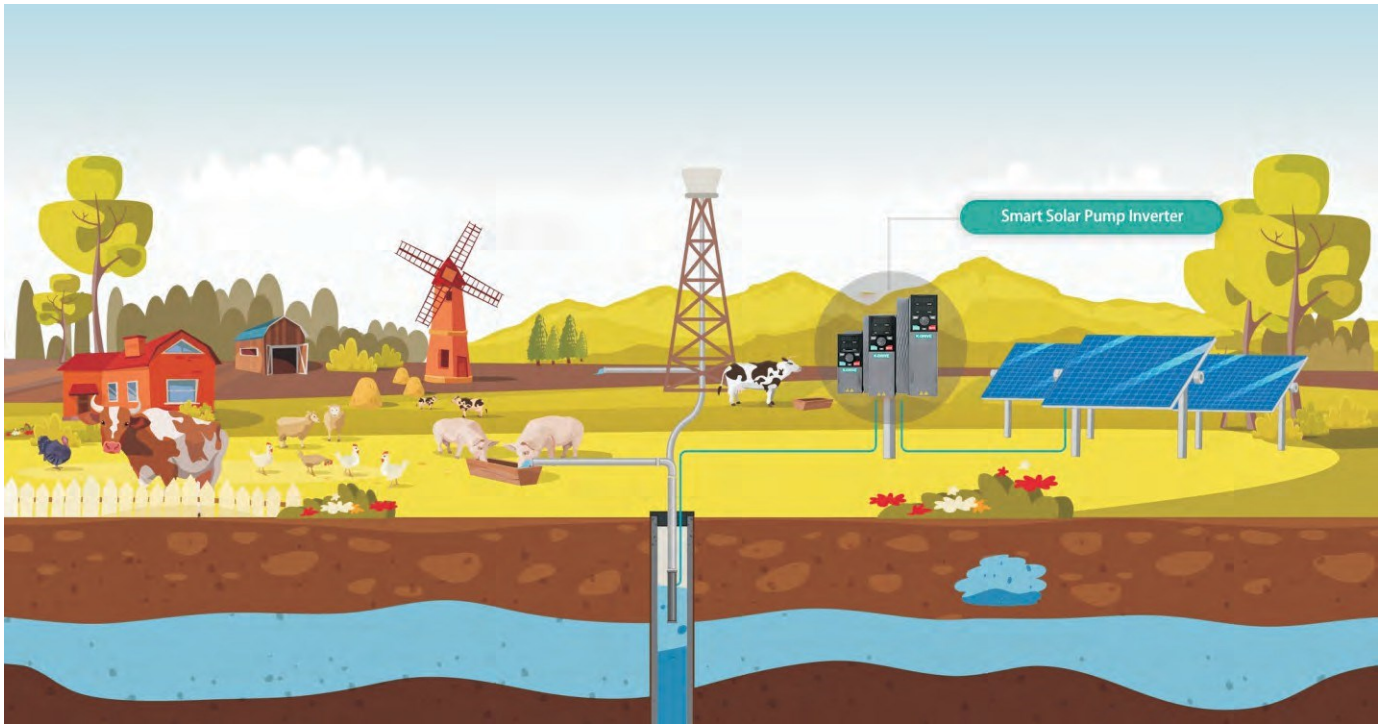


## 01 MPPT

The SP700 solar pump drive is tailored to effectively use the energy from the sunshine. Its inbuilt maximum power point tracking functionality always feeds the maximum amount of power possible from the panels to the pump.

## 02 Classified user mode

SP700 drives are equipped with three operation modes. Plug-and-Play Mode is for robust MPPT operation, while Senior Mode for the best performance of MPPT. Professional Mode is designed for the users who ask for comprehensive water supply functions.

## 03 Automatic run/sleep

When sunlight radiation meets the threshold requirement, a SP700 solar pump drive starts automatically, and the pump connected to it begins to run. When the sunshine is weak, the pump will fall into sleep.



## 04 Dry run protection

Dry run protection is one of quite important functionalities for automatic operation of the water pumping system, realized by SIMATIC MOTION without requirement of signal feedback from any devices.



# Flexible control mode

**Pressure control mode under AC power supply from grid or diesel generator.**

Users would like to use this functionality in some water supply systems, when the pressure is required to be a constant value and the drive is being connected to AC power supply from grid or diesel generator.

**Constant speed mode under AC power supply**

Users are most likely to use this functionality when sun radiation is not strong enough or unavailable, and the water supply system just simply requires the water to be pumped at the rated output.

**Pressure limit mode under power supply from solar panels.**

Users need to use this functionality in some water supply systems, when the pressure needs to be limited not to exceed a certain value.

**Multistep pressure mode**

This functionality is quite useful sometimes for farm irrigation when different area requires different pressures.

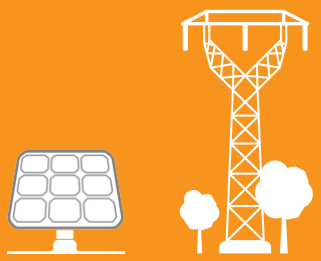

## SP700-SPECIFICATION

| Input Specification | 2S | 4T |
|---|---|---|
| Max. input DC voltage | 450VDC | 800VDC (900VDC optional) |
| Recommended VOC voltage range | 360 ~430VDC | 550 ~750VDC |
| Recommended MPPT voltage range | 250 ~350VDC | 450~600VDC |
| Starting voltage range | 160-450VDC (Adjustable parameters) | 250-800VDC (Adjustable parameters) |
| **Grid or Backup Generator Input** | **2S** | **4T** |
| Input AC voltage | Single-phase/ Three-phase 220V<br>Range:-15% ~20% | Three-phase 380V<br>Range: 15% ~20% |
| **Output Specification** | **2S** | **4T** |
| Rated output voltage AC | 3PH/1PH 220V | Three-phase380V |
| Output frequency range | 0 ~500.00HZ | |
| **Protection** | | |
| Built-in protection | Overvoltage, overcurrent, output phase loss, overload, undervoltage, short circuit,overheating, dry running of the pump under load, etc. | |

## Grid power supply debugging

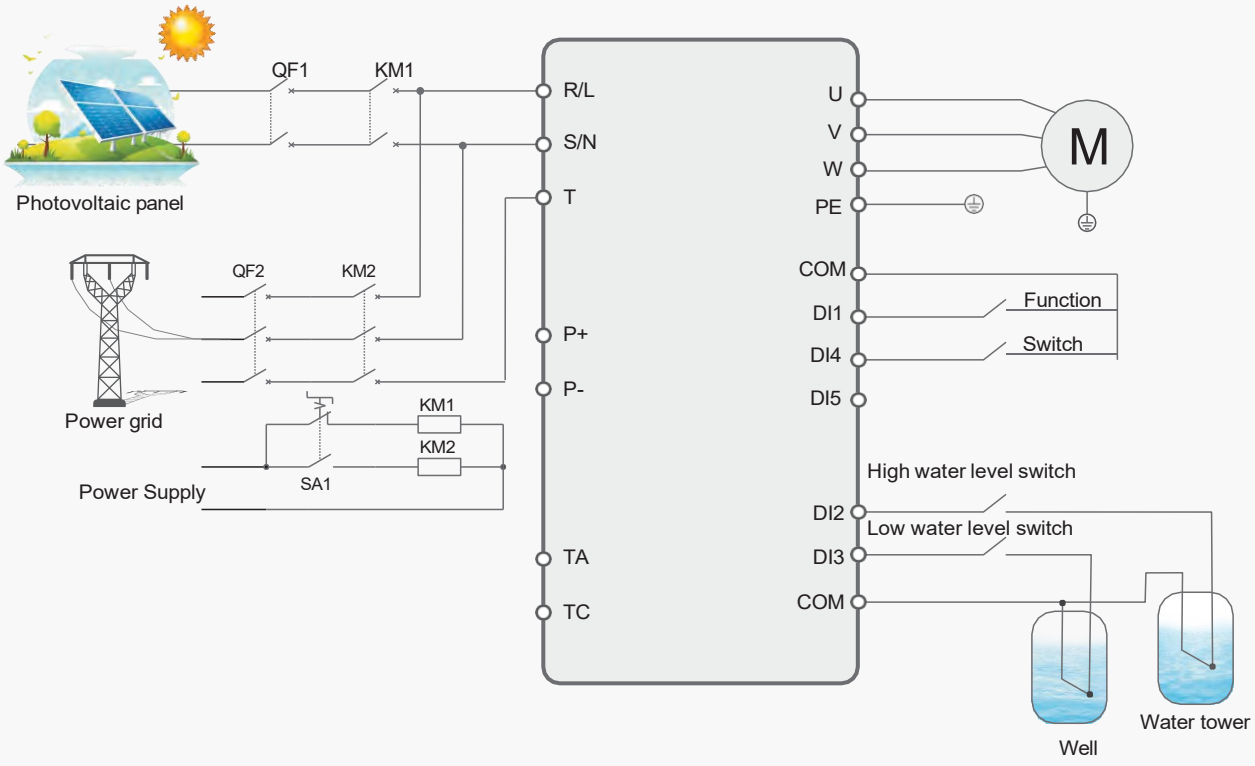

# Grid power supply debugging

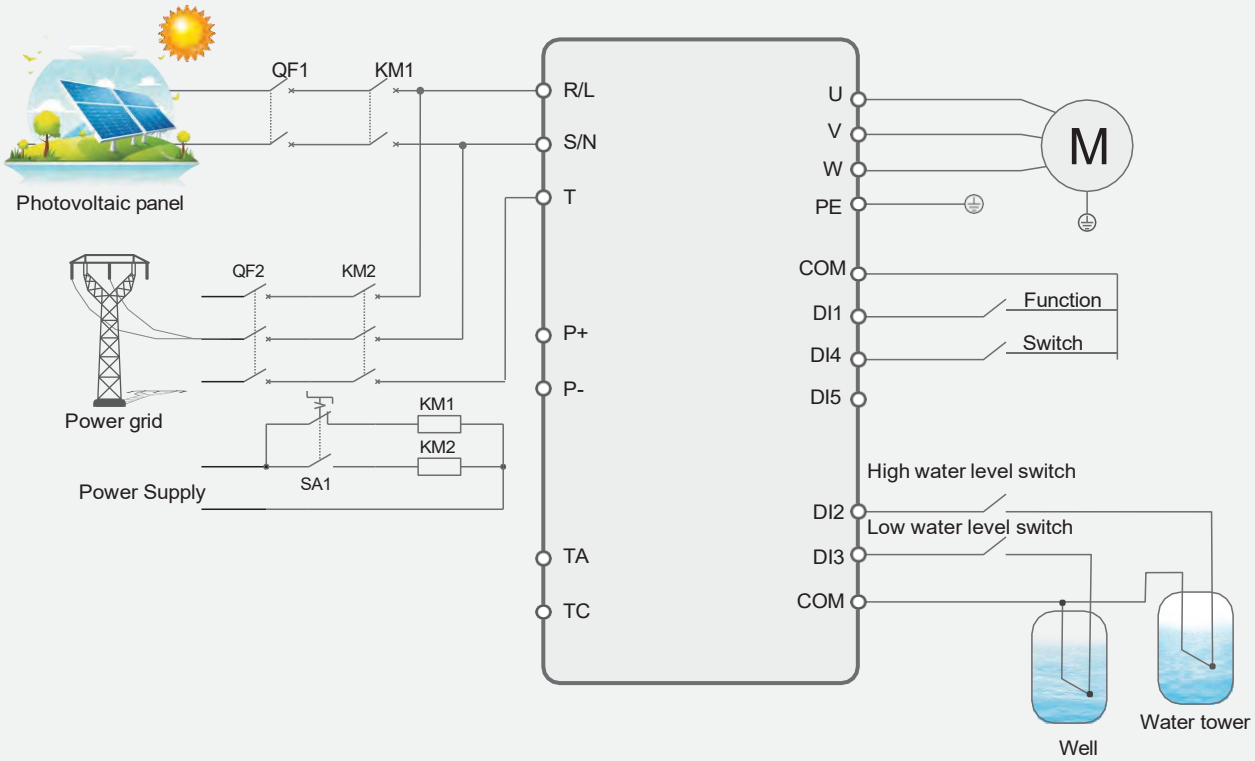


## Automatic switching and debugging of photovoltaic panels and grid power supply

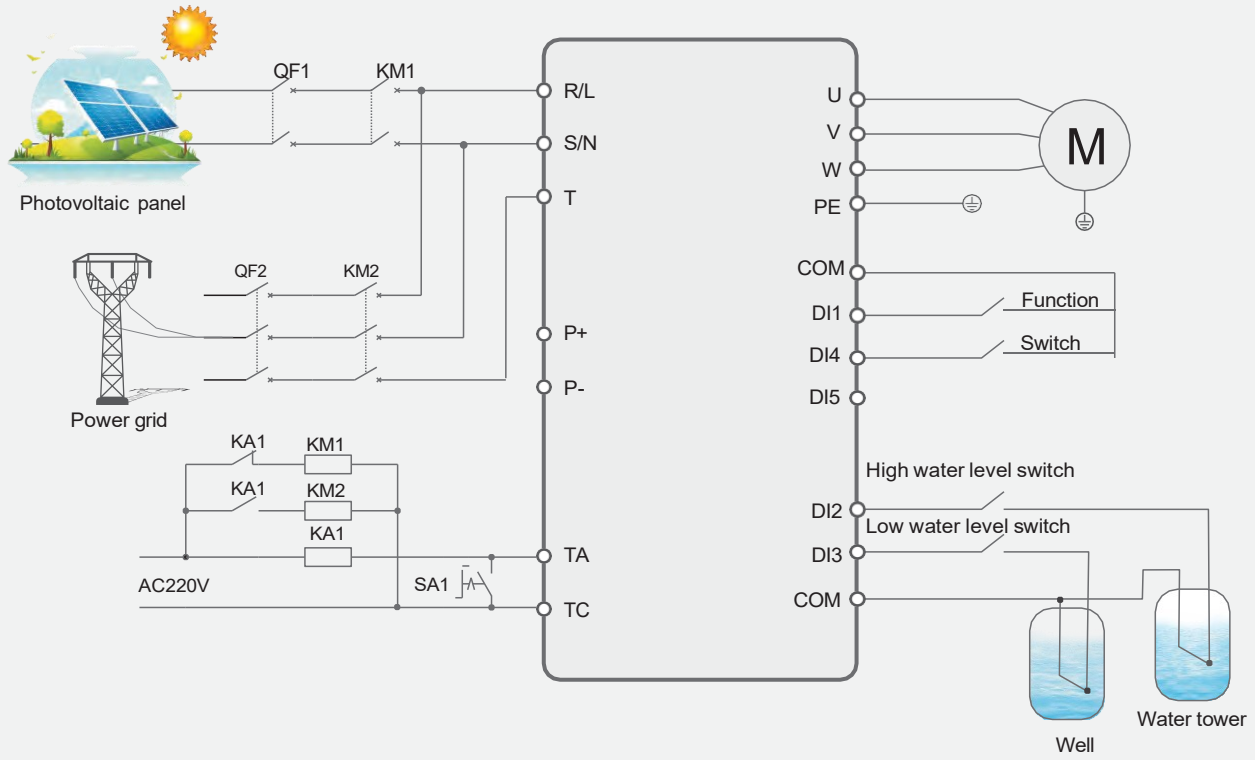

# Optional GPRS monitoring device




SIMATIC MOTION solar pump inverter GPRS system is a professional monitoring system platform managing solar pump plants.

It supplies water volume monitoring and operation of inverter from anywhere at any time.

It's convenient to visit real time and historical data via web or IOS & Android APP anytime and anywhere.

This easy-to-use platform make monitoring of solar pump systems simple and convenient, far reducing operate time and monitoring costs as well.

# Installation and terminal connection

| Terminal | Drive | GPRS module |
|---|---|---|
| Power terminal | 24+ | VCC |
| | COM | GND |
| Communication terminal | 485+ | TX1/A1+ |
| | 485- | RX1/B1- |

- Iphone
- Ipad
- Android devices





**Monitor and operate at anytime,from anywhere**

# GPRS OPERATION

## Remote control and monitor from PC side

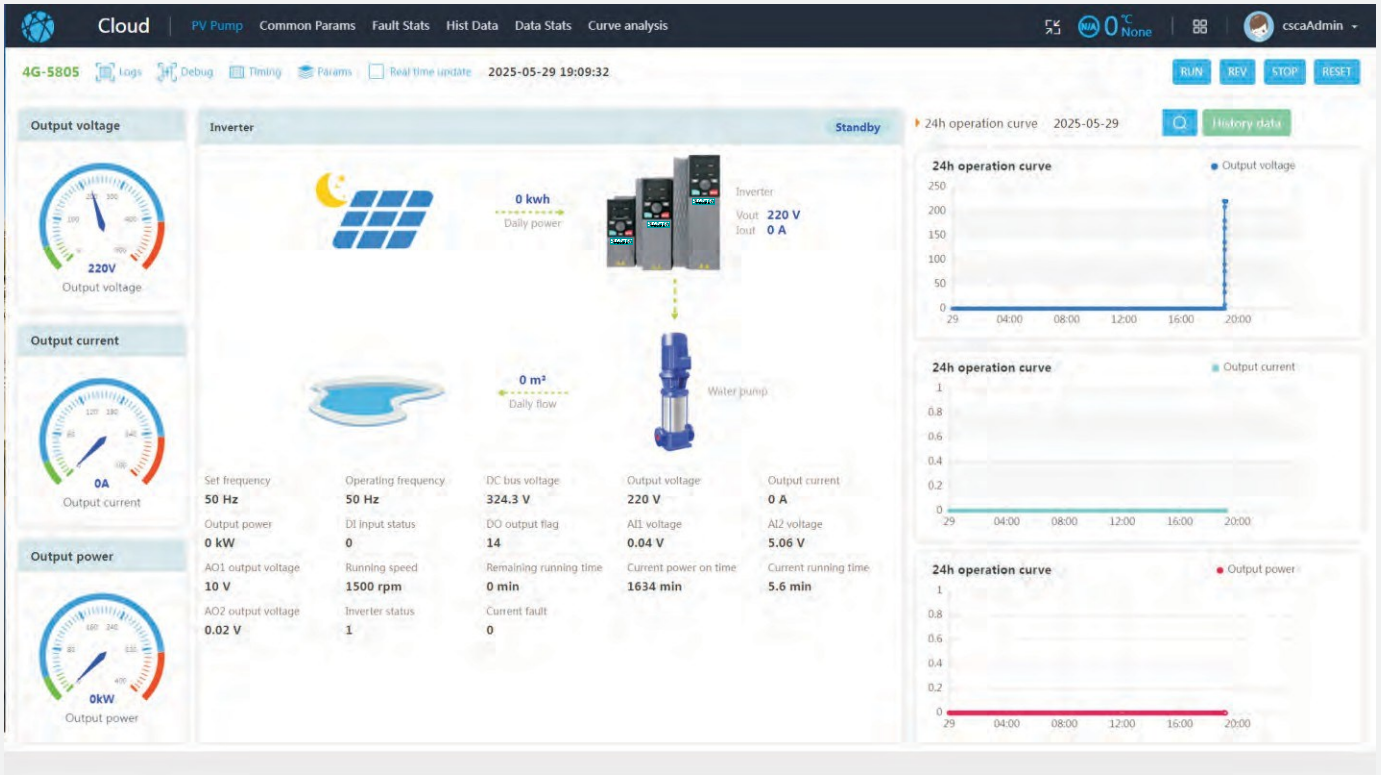


## Remote control and monitor from mobile phone side

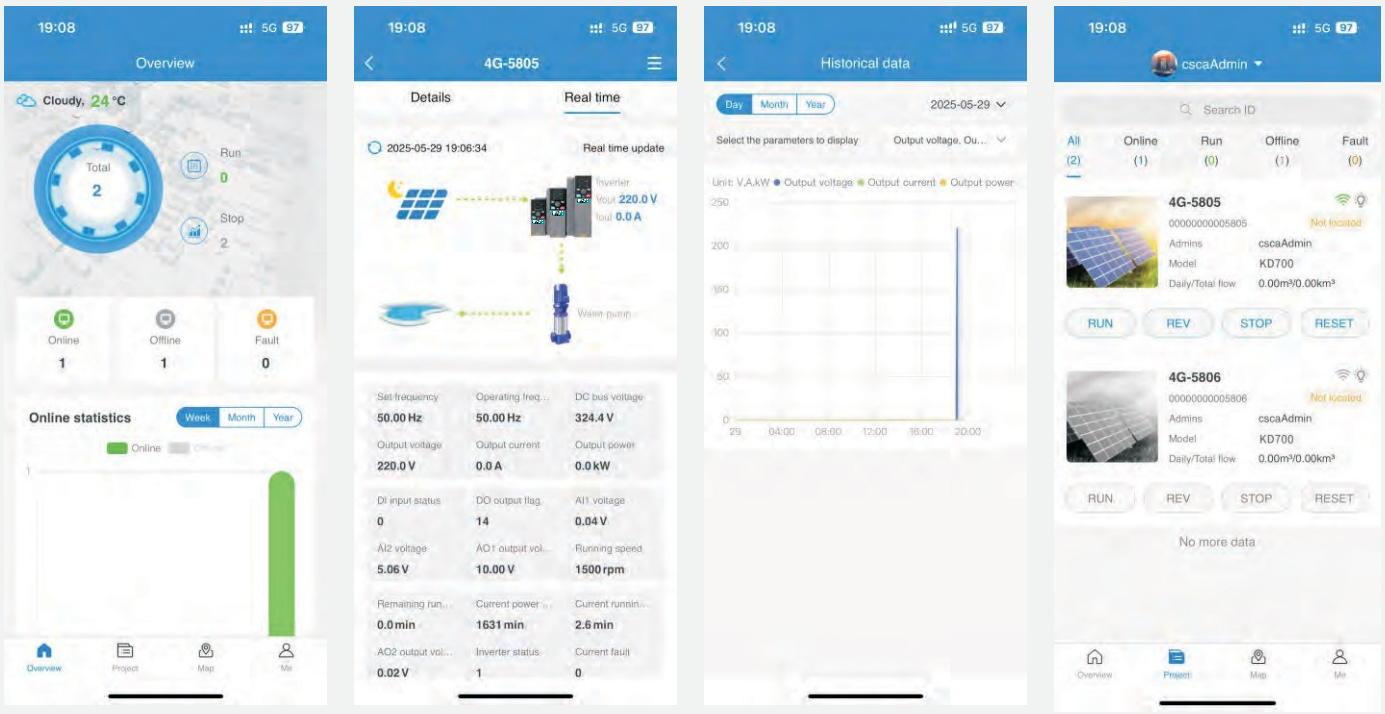

SIMATIC motion





700 Junction Box

# KD700 Optional cards

In order to solve the problem that the KD600 series can only connect one expansion card at a time, we have developed this junction box specifically for the 700 series inverter. The 700 series inverter can connect I/O expansion cards, communication expansion cards (EtherCAT, ProfitBUS, ProfitNET) and PG cards (except PLC modules) at one time. Customers can choose external expansion modules by themselves, which can provide more flexible deployment solutions.

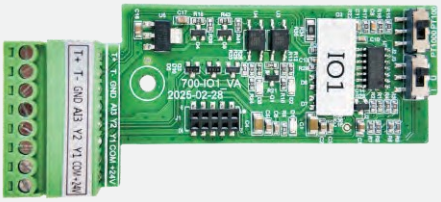


## KD700-IO1

I/O expansion card 1

- 5 digital inputs;
- 1 relay output;
- 1 analog AO2 output;
- 1 digital Y2 output, 1 temperature detection (PT100/PT1000/ PTC/KTY).

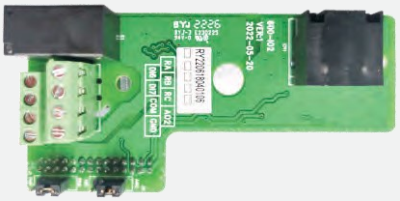

## KD700-IO2

I/O expansion card 2

- 2 digital inputs;
- 1 relay output;
- 1 analog AO2 output.

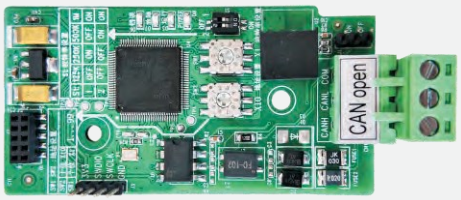


## KD700-CANOPEN

CANOPEN communication card

- CANOPEN communication adapter card.

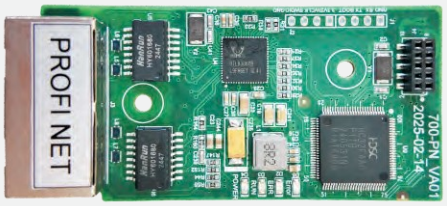


## KD700-PROFI NET

ProfiNET communication card

- It complies with the internationally accepted Profinet Et-hernet standard. The card is installed on the inverter to improve communication efficiency, facilitate the inverter networking function, and make the inverter a slave station of the fieldbus and accept the control of the fieldbus master station.

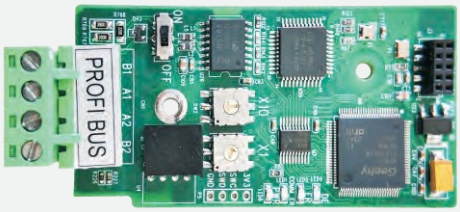


## KD700-PROFI BUS

Profibus-DP communication card

- The Profibus-DP fieldbus adapter card complies with the internationally accepted Profibus fieldbus standard, which can improve the communication efficiency of the inverter and realize the networking function, making the inverter a slave station of the fieldbus and accepting the control of the fieldbus master station. This DP expansion card can realize Profibus-DP communication.




## KD700-ETHERCAT

Ether CAT communication card

- Ether CAT fieldbus adapter card can be used for ultra-high-speed I/O networks. This protocol is applicable to the I/O layer.

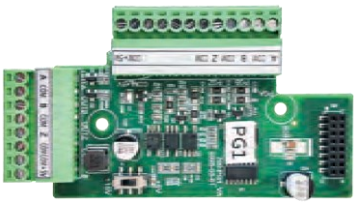


## KD700-PG1

ABZ Open integrated electrode PG1 Card

- Open collector PG card (PG card 1 can only be applied to asynchronous motor; compatible with complementary output, encoder card output DC power supply optional
  +12V or +5V ( jumper selection); suitable for asynchro-nous motor closed loop vector control (VC).

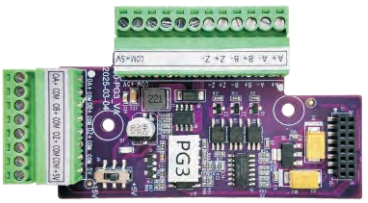


## KD700-PG3

ABZ Difference PG3 Card

- ABZ differential signal input PG card: 1:1 differential freq-uency division output;
- Suitable for asynchronous electric motor closed loop vector control (VC).

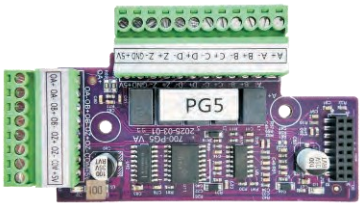


## KD700-PG5

Sin/Cos PG5 Card

- Supports sine and cosine signal input; supports differen-tial frequency division output; suitable for synchronous electric motor closed-loop vector control (VC).




## KD700-PG6

Rotary PG6 Card

- Applicable rotary transformer, DB9 interface, optional shielded encoder cable. Applicable to synchronous traction machine closed loop vector control (VC).

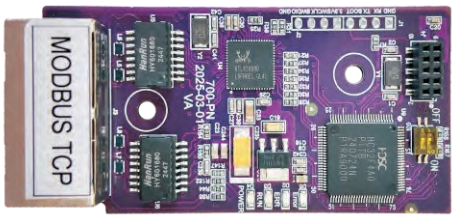


## KD700-MODBUS TCP

Modbus TCP Card

- Trough the Modbus TCP protocol,the inverter can exc-hange data with other devices that support Modbus TCP, enabling remote monitoring and control.




## SIMATIC MOTION Monitoring

Host software for PC

- This software communication tool can run on personal computers for drive operation, parameter value setting, waveform monitoring, fault alarm, etc;
- Supports all series.







# KD700 - PLC

## Expansion Card

KD700-PLC is a newly developed PLC by our company to improve the convenience of customers using PLC in certain occas-ions. Like expansion cards, it can be directly embedded into the frequency converter, and the software is based on Mitsubishi FX2N.

## HARDWARE RESOURCE

| Hardware resource | Component type | Parameter |
|---|---|---|
| INPUT | X0~X7, X10~X13 | 12-CH/PNP-NPN/18-30V |
| Output Point | Y0~Y6 | Y0 Y1 transistor type (open drain output), Y2 (A1.B1), Y3 (A2.B2), Y4 (A3.B3), Y5 (A4.B4) are four relay types, and Y6 is occupied by the frequency converter |
| Analog input | AI1, AI2, AI3 | 3-CH/supports 0-10V |
| Analog output | A0 | 1-CH/Supports 0-10V/0-20mA |
| Communication output | COM1 | PLC program download port Rs232 |
| | COM2 | PLC and external communication support RS485 baud rate: 300/600/1200/2400/4800/9600/19200/38400 |
| | COM3 | Internal frequency converter occupancy, 300/600/1200/2400/4800/9600/19200/38400 |

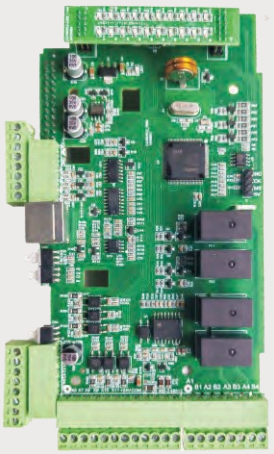

## INSTALLATION DIAGRAM







| Serial communication | | Input terminal | | | | | | | | | | | |
|---|---|---|---|---|---|---|---|---|---|---|---|---|---|
| RS232 | | X0 | X1 | X2 | X3 | X4 | X5 | X6 | X7 | X10 | X11 | X12 | X13 |
| Analog port | | | | | | 485 communication | | Y output | | 24V power supply | | | |
| +10V | GND | AO | AI1 | AI2 | Ai3 | 485+ | 485- | Y0 | Y1 | 24V | COM | 24V | COM |
| 24V power supply | | Y2 relay | | | Y3 relay | | | Y4 relay | | | Y5 relay | | |
| 24V | COM | A1 | B1 | Normally open | A2 | B2 | Normally open | A3 | B3 | Normally open | A4 | B4 | Normally open |

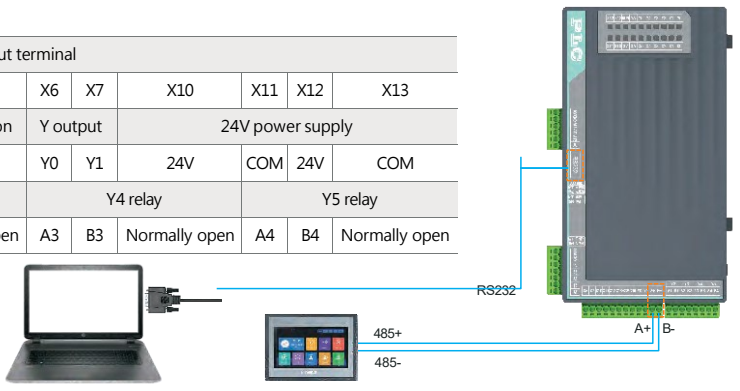

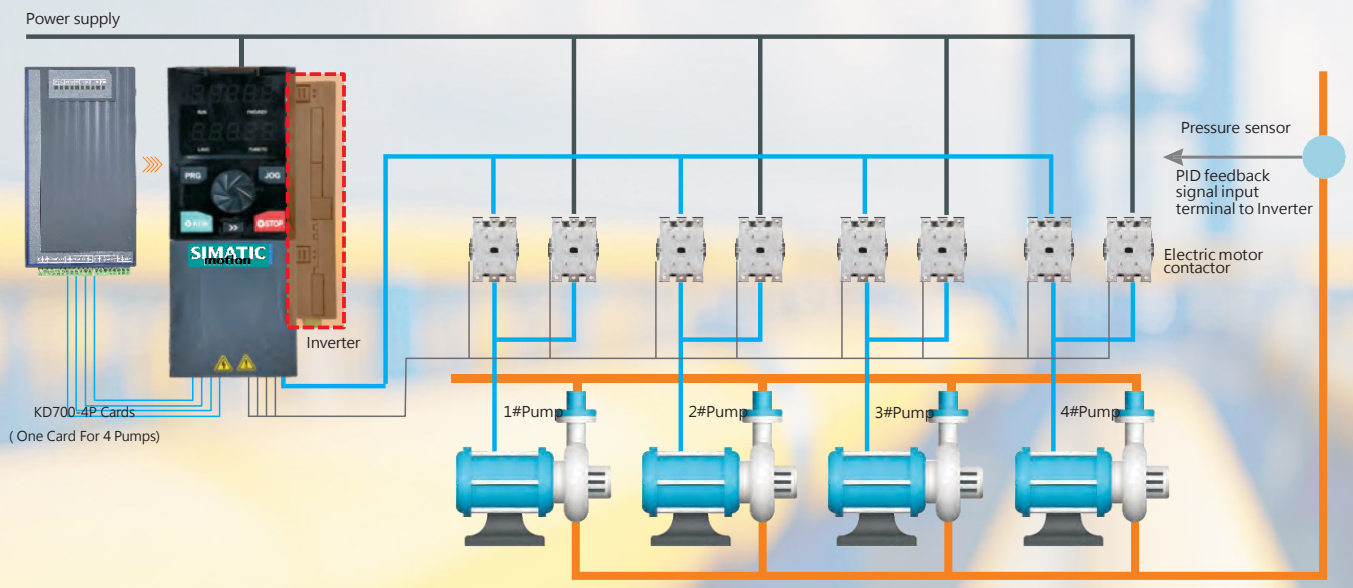


# KD700 Series

## One to multiple pumps for water supply

### ADVANTAGE

- Replace traditional water pump controllers and achieve 1-4 pumps working together for continuous water supply;
- Dynamic power matching, equipped with intelligent sleep and wake-up function, with significant energy-saving and efficiency enhancing effects;
- Adaptive load regulation, supporting rotation operation mechanism, extending the overall service life of the pump unit by about 25% -40%;
- Multiple linkage protection, supporting multiple protections such as overload, phase loss, overvoltage, overcurrent, high and low voltage alarms, water shortage protection, etc.

### SENSOR WIRING DIAGRAM

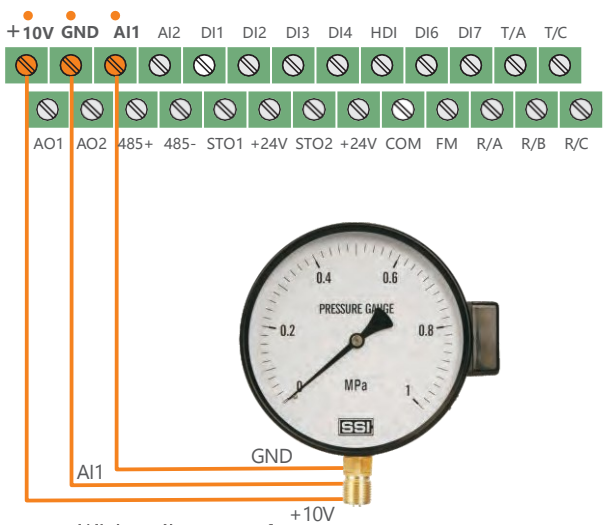


Wiring diagram of remote pressure gauge

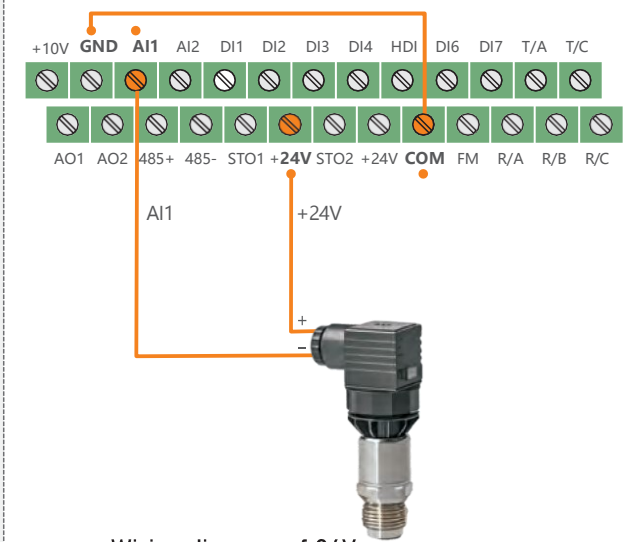


Wiring diagram of 24V pressure sensor

## SYSTEM DIAGRAM OF ONE TO MULTIPLE PUMPS

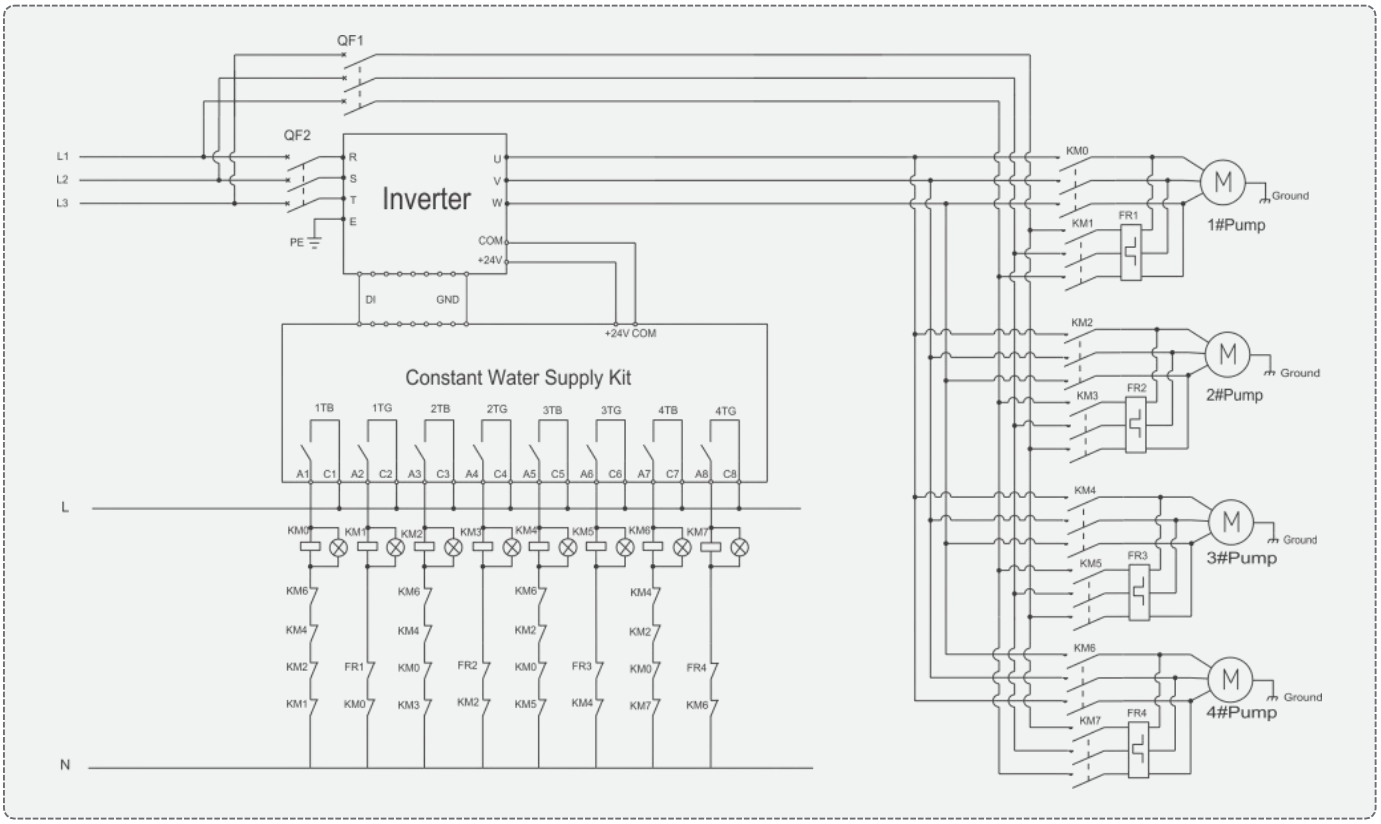


## FUNCTIONAL TERMINAL WIRING DIAGRAM AND PARAMETERS

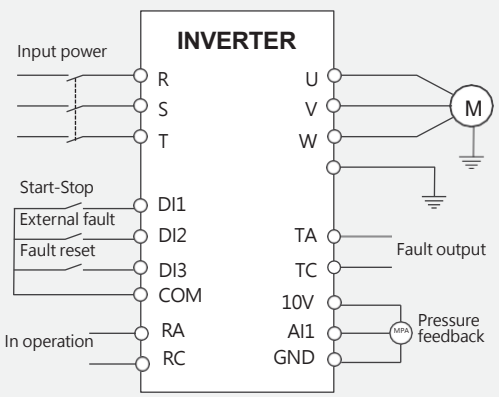


| Step | Function Code | Set Value | Description |
|---|---|---|---|
| 1 | P0-04 | 1 | Terminal control start stop |
| 2 | P0-06 | 6 | The frequency source is PID |
| 3 | P1-13 | 1 | Shutdown mode: Free shutdown |
| 4 | P5-01 | 11 | Di2 function external malfunction |
| 5 | PA-01 | Set as needed | PID setpoint |
| 6 | PA-03 | 0 | The PID feedback source is Ai1 |
| 7 | PC-16 | Set as needed | Selection of pump quantity mode |
| 8 | B6-00 | 2 | Sleep mode selection |
| 9 | B6-01 | Set as needed | Sleep frequency |
| 10 | B6-02 | Set as needed | Sleep delay |
| 11 | B6-03 | Set as needed | Wake up difference |

- Soft start stop combined with PID smooth speed regulation to reduce motor starting impact;
- Select the number of water pumps according to the demand;
- Intelligent priority scheduling of water pumps;
- Faul tolerant switching pump mechanism, pressure fluctuation< ± 0.03MPa;
- Excellent energy-saving optimization algorithm, with a comprehensive energy-saving rate of 25% -30% for pump units

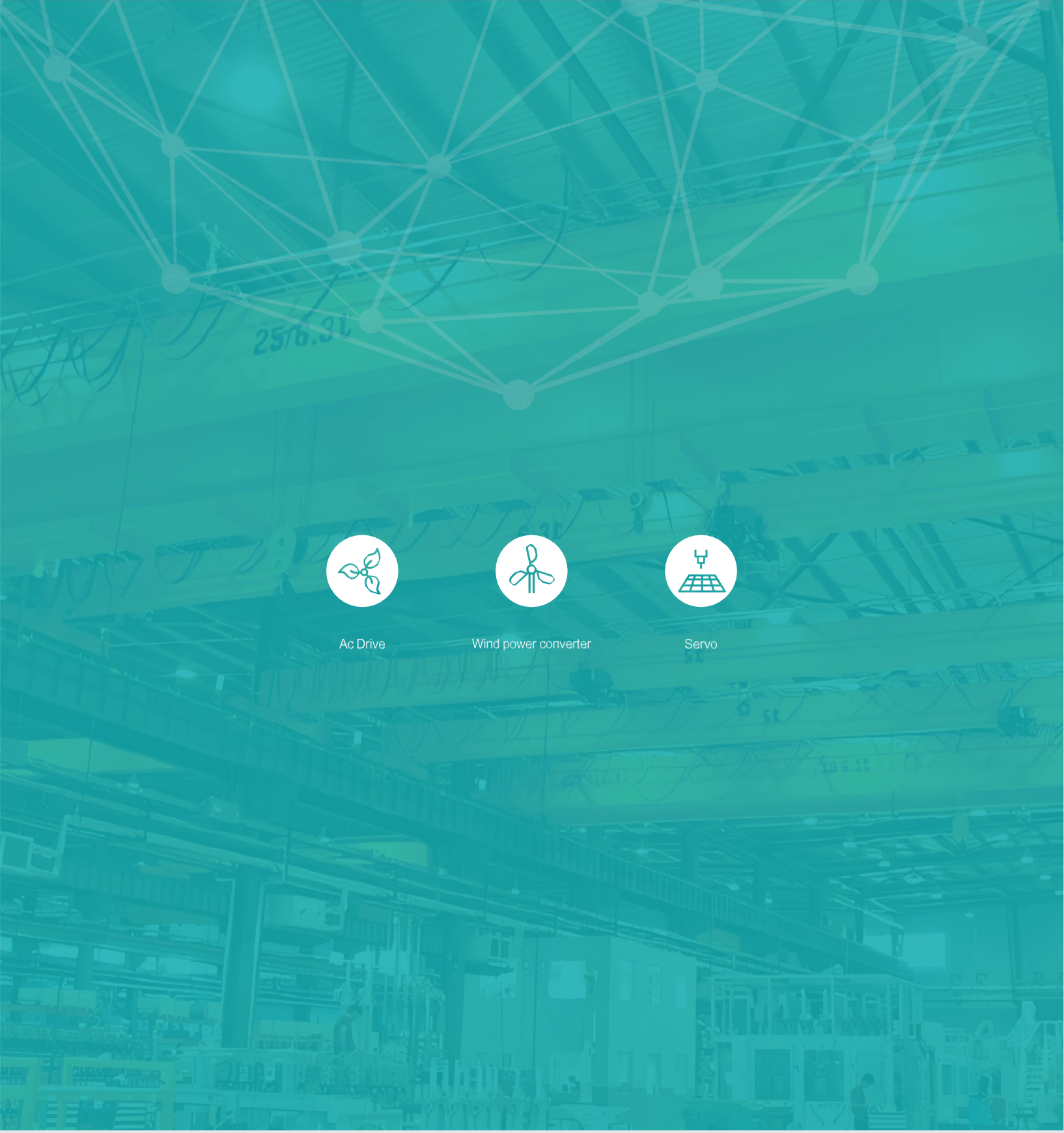
Ac Drive
Wind power converter
Servo